PROJECT ID: 14-3775(11)
WITH:

COUNTY: WAUKESHA

ORDER OF SHEETS

Section No. 1	Title
Section No. 2	Typical Sections and Details
Section No. 3	Estimate of Quantities
Section No. 3	Miscellaneous Quantities
Section No. 4	Right of Way Plat
Section No. 5	Plan and Profile
Section No. 6	Standard Detail Drawings
Section No. 7	Sign Plates
Section No. 8	Structure Plans
Section No. 9	Computer Earthwork Data
Section No. 9	Cross Sections

TOTAL SHEETS = ___

WAUKESHA COUNTY
DEPARTMENT OF PUBLIC WORKS

PLAN OF PROPOSED IMPROVEMENT

GENESEE STREET

MILL STREET TO OAKWOOD DRIVE

C.T.H. "C"
WAUKESHA COUNTY

STATE PROJECT NUMBER
14-3775(11)

N

DESIGN DESIGNATION

A.A.D.T. (2016)	=	8800
A.A.D.T. (2036)	=	11,800
D.H.V. ------	=	---
D.D.	=	50--50
T. -----	=	5.8%
DESIGN SPEED	=	40 MPH
ESALS	=	883,300

CONVENTIONAL SYMBOLS

PLAN
- CORPORATE LIMITS
- PROPERTY LINE (PL + 58.1)
- LOT LINE
- LIMITED HIGHWAY EASEMENT
- EXISTING RIGHT OF WAY
- PROPOSED OR NEW R/W LINE
- SLOPE INTERCEPT
- REFERENCE LINE
- EXISTING CULVERT
- PROPOSED CULVERT (Box or Pipe)
- COMBUSTIBLE FLUIDS (CAUTION)
- MARSH AREA
- WOODED OR SHRUB AREA

PROFILE
- GRADE LINE
- ORIGINAL GROUND
- MARSH OR ROCK PROFILE (To be noted as such) (ROCK)
- SPECIAL DITCH (LABEL)
- GRADE ELEVATION (95.36)
- CULVERT (Profile View)

UTILITIES
- ELECTRIC — E —
- FIBER OPTIC — FO —
- GAS — G —
- SANITARY SEWER — SAN —
- STORM SEWER — SS —
- TELEPHONE — T —
- WATER — W —
- UTILITY PEDESTAL
- POWER POLE
- TELEPHONE POLE

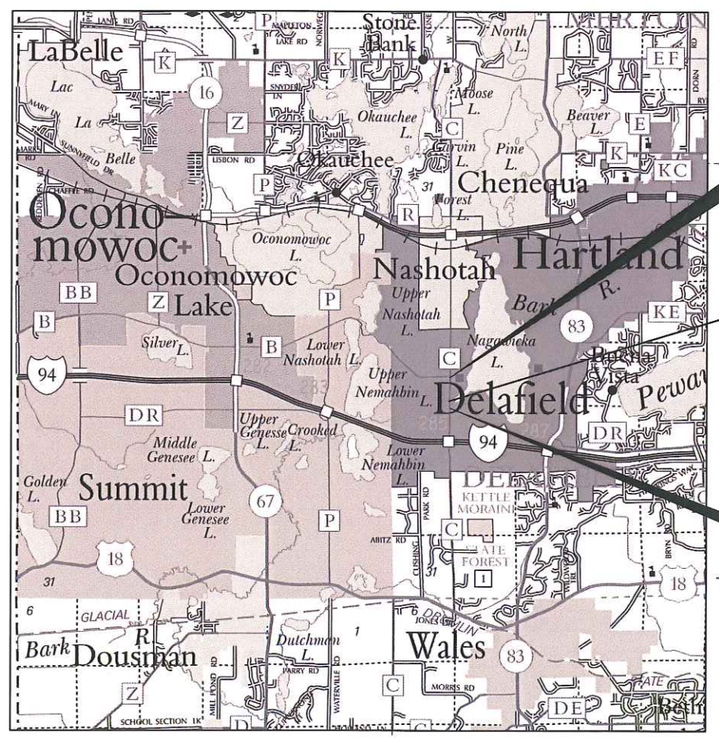

END PROJECT
STA. 154+26.77

B-67-0358

BEGIN PROJECT
STA. 130+54.63
X = 637,126.76
Y = 179,682.92

LAYOUT
SCALE 0 1 MI.

TOTAL NET LENGTH OF CENTERLINE = 0.448 MI.

COORDINATES ON THIS PLAN ARE REFERENCED TO THE WISCONSIN COUNTY COORDINATE SYSTEM NAD83 (2011)
ALL ELEVATIONS SHOWN ON THIS PLAN ARE REFERENCED TO THE NGVD-88.

ACCEPTED FOR
WAUKESHA COUNTY DEPARTMENT OF PUBLIC WORKS

1-11-16 DATE — Allison Bussler DIRECTOR

1/5/16. DATE — Gary A. Evans ENGINEERING SERVICES MANAGER

APPROVED FOR THE CITY OF DELAFIELD

1/5/16 DATE — Thomas E. Williams DIRECTOR OF PUBLIC WORKS

ORIGINAL PLANS PREPARED BY:

WISCONSIN PROFESSIONAL ENGINEER
CRAIG T. DONZE
E-35380
BROOKFIELD, WI

01/05/16 DATE — PROFESSIONAL ENGINEER

PREPARED BY
Surveyor: ONE SOURCE CONSULTING
Designer: ONE SOURCE CONSULTING

E

SECTION 2 SHEET ORDER

GENERAL NOTES & HMA LIFT TABLE
PROJECT OVERVIEW
TYPICAL SECTIONS
CONSTRUCTION DETAILS
CLEARING & GRUBBING PLAN
PAVING DETAILS
CURB RAMP DETAILS
STORM SEWER PLAN
EROSION CONTROL
SIGN REMOVAL PLAN
PERMANENT SIGNING PLAN
PAVEMENT MARKING PLAN
STREET LIGHTING PLAN
LANDSCAPING PLAN
FRESHWATER SUPPLY RELAY
TRAFFIC CONTROL STAGING PLANS
TEMPORARY SIGNAL PLANS
ALTERNATE ROUTE PLAN
ALIGNMENT LAYOUT

HMA PAVEMENT

NOMINAL THICKNESS REQUIREMENTS (INCHES)
AGGREGATE GRADATION NOMINAL SIZE (mm)

ROADWAY	HMA PAVEMENT	TOTAL THICKNESS	PERFORMANCE GRADE	UPPER LAYER	LOWER LAYER
GENESEE STREET	C-1	6.0"	PG 58-28	2.00" 9.5mm	4.00" 19.0mm
SIDE ROADS	C-1	5.0"	PG 58-28	1.50" 9.5mm	3.50" 19.0mm
DRIVEWAYS, PARKING LOTS AND PATH	COMMERCIAL MIX	3.0"	PG 58-28	3.00" 9.5mm	----

GENERAL NOTES

NO TREES OR SHRUBS ARE TO BE REMOVED WITHOUT THE APPROVAL OF THE ENGINEER.

THE LOCATIONS OF EXISTING AND PROPOSED UTILITY INSTALLATIONS, AS SHOWN ON THE PLANS, ARE APPROXIMATE. THERE MAY BE OTHER UTILITIES AND UTILITY INSTALLATIONS WITHIN THE PROJECT LIMITS THAT ARE NOT SHOWN.

THE CRUSHED AGGREGATE FOR SHOULDERS ADJACENT TO THE HMA PAVEMENT SHALL NOT BE PLACED UNTIL AFTER THE SURFACE LAYER OF THE HMA PAVEMENT HAS BEEN LAID.

EROSION CONTROL MEASURES AS SHOWN ON THE PLANS ARE SUGGESTED LOCATIONS. THE EXACT LOCATION WILL BE DETERMINED BY THE ENGINEER OR BASED ON THE EROSION CONTROL IMPLEMENTATION PLAN.

INSTALL EROSION CONTROL MEASURES PRIOR TO STARTING WORK IN IMPACTED AREAS.

CURVE DATA IS BASED ON THE ARC DEFINITION, OR R=5729.58' FOR ONE DEGREE CURVE.

CURB AND GUTTER GRADES ARE SHOWN AT THE FLANGE UNLESS NOTED OTHERWISE. STATION AND OFFSET AT CURB AND GUTTER ARE TO THE FACE OF CURB.

INLET AND DISCHARGE ELEVATIONS FOR DRAINAGE STRUCTURES SHOWN ON THE PLAN ARE APPROXIMATE AND SHALL BE DETERMINED BY THE ENGINEER IN THE FIELD.

ALL DISTURBED AREAS EXCEPT THE AREAS BETWEEN THE SUBGRADE SHOULDER POINTS SHALL BE FINISHED WITH TOPSOIL OR SALVAGED TOPSOIL, FERTILIZED, SEEDED, AND MULCHED UNLESS NOTED OTHERWISE.

PRIOR TO ORDERING DRAINAGE PIPES AND STRUCTURES, VERIFY RELATED DRAINAGE INFORMATION IN THE PLAN WITH THE ENGINEER.

CURB AND GUTTER REMOVAL AND REPLACEMENT SHALL BE DETERMINED BY THE ENGINEER IN THE FIELD, PLAN SHEETS INDICATE APPROXIMATE LOCATIONS.

RESTORATION OF EXPOSED SLOPES AND DITCHES SHALL TAKE PLACE NOT MORE THAN 7 CALENDAR DAYS AFTER GRADING IS COMPLETE UNLESS OTHERWISE DIRECTED BY THE ENGINEER. EVERY EFFORT SHALL BE MADE BY THE CONTRACTOR'S SEQUENCE OF OPERATIONS TO LIMIT THE DURATION THAT BARE GROUND IS EXPOSED. SENSITIVE AREAS LOCATED UPGRADIENT OF WETLAND AND WATERWAYS SHALL BE STABILIZED OR PERMANENTLY RESTORED IMMEDIATELY UPON COMPLETION OF THE WORK AND IN ADVANCE OF FORECAST RAINFALL 1/2-INCH OR GREATER.

STANDARD DETAIL DRAWINGS

8A5-19b	INLET COVER TYPE B, B-A, C. MS, MS-A & WM
8A9-1	CATCH BASINS 2x3-FT, & 2.5X3-FT
8B9-1	MANHOLES 3-FT, 4-FT, 5-FT, 6-FT, 7-FT, & 8-FT DIAMETER
8C7-1	INLETS 2X2-FT, 2X2.5-FT, 2X3-FT, & 2.5X3-FT
8C8-1	INLETS MEDIAN 1 AND 2 GRATE
8D1-18	CONCRETE CURB, CONCRETE CURB & GUTTER AND TIES
8D4-5	CONCRETE SURFACE DRAINS & ASPHALTIC FLUMES
8D5-16b	CURB RAMPS TYPES 2 AND 3
8D5-16e	CURB RAMPS TYPE 5, 6, 7A & 8
8D16-10	CONCRETE GUTTER, CURB AND GUTTER AND PAVEMENT TIES
8E8-3	TYPICAL INSTALLATIONS OF EROSION BALES/TEMPORARY DITCH CHECKS
8E9-6	SILT FENCE
8E10-2	INLET PROTECTION TYPE A, B, C AND D
8E14-1	TRACKING PAD
8F1-11	APRON ENDWALLS FOR CULVERT PIPE
8F2-1	APRON ENDWALLS FOR PIPE ARCH AND ELLIPTICAL PIPE
8F4-7	JOINT TIES FOR CONCRETE PIPE AND CONCRETE COLLAR DETAIL
8F5-1	CLASS "B" BEDDING FOR CULBERTY PIPE OR STORM SEWER
9B2-9	CONDUIT
9B4-11	PULL BOX
9C2-7	CONCRETE BASES 1, 2, 5 & 6
12A3-10	NAME PLATE (STRUCTURES)
13B2-8a&b	CONCRETE PAVEMENT APPROACH SLAB
14A1-3	TREE PRESERVATION DETAIL
14A2-1	TREE PLANTING DETAIL
15A3-2a&b	FLEXIBLE MARKER POST FOR CULVERT END
15C3-3	BARRICADES AND SIGNS FOR SIDEROAD CLOSURES
15C5-3	TRAFFIC CONTROL, ADVANCE WARNING SIGNS 40 M.P.H. OR LESS TWO-WAY UNDIVIDED ROAD OPEN TO TRAFFIC
15C7-12b	PAVEMENT MARKING WORDS
15C7-12c	PAVEMENT MARKING ARROWS
15C8-16a	PAVEMENT MARKING (MAINLINE)
15C8-16b	PAVEMENT MARKING (INTERSECTIONS)
15C8-16e	PAVEMENT MARKING (LEFT TURN LANE)
15C8-16f	PAVEMENT MARKING (ISLANDS)
15C11-5	FLEXIBLE TUBULAR MARKER POST, ANCHOR & BASES
15C12-4	TRAFFIC CONTROL FOR LANE CLOSURE (SUITABLE FOR MOVING OPERATIONS)
15C33-1	STOP LINE AND CROSSWALK PAVEMENT MARKING
15D30-2a	TRAFFIC CONTROL PEDESTRIAN ACCOMMODATIONS
15D33-4	TRAFFIC CONTROL ONE LANE ROAD WITH TEMPORARY SIGNALS
16A1-6	LANDMARK REFERENCE MONUMENTS AND COVERS

UTILITIES WITHIN THE PROJECT LIMITS

CENTURY LINK
MARK MURN
mark.murn@centurylink.com
224 INDUSTRIAL DRIVE
NORTH PRAIRIE, WI 53153
(262) 392-5210

WE-ENERGIES
SEND ALL CORRESPONDANCE TO:
LATROY BLUMFIELD
333 W. EVERETT ST., A299
MILWAUKEE, WI 53203
(414) 221-5617

WE-ENERGIES (ELECTRIC)
CONSTRUCTION FIELD CONTACT:
BRYAN STOEHR
bryan.stoehr@we-energies.com
500 S. 116TH STREET
WEST ALLIS, WI 53214
(414) 944-5516

WE-ENERGIES (GAS)
CONSTRUCTION FIELD CONTACT:
DANIELLE FINK
Danielle.Fink@we-energies.com
500 S. 116TH STREET
WEST ALLIS, WI 53214
(414) 944-5627

TIME WARNER CABLE
STEVE STORM
UTILITY COORDINATION SUPERVISOR
steve.storm@twcable.com
1320 N. DR. MARTIN LUTHER KING JR. DR.
MILWAUKEE, WI 53212
(414) 908-4785

MIDWEST FIBER NETWORKS
MATT HEBEL
mhebel@midwestfibernetworks.com
3701 W. BURNHAM STREET, SUITE C
MILWAUKEE, WI 53215
(414) 672-5612

CITY OF DELAFIELD
PUBLIC WORKS DIRECTOR
TOM HAFNER
111 MAIN STREET
DELAFIELD, WI 53018
(920) 646-6225

SANITARY SEWER
DELAFIELD-HARTLAND
WATER POLLUTION CONTROL
416 BUTLER DRIVE
DELAFIELD, WI 53018
ATTN: SCOTT LUCZAK
(262) 646-4364
sldelhart@centurytel.net

DESIGN CONTACTS

ROADWAY DESIGN
ONE SOURCE CONSULTING
19435 W. CAPITOL DRIVE, SUITE L05
BROOKFIELD, WI 53045

ATTN: CRAIG DONZE, PE
(262) 781-9005
cdonze@onesourceconsult.com

STRUCTURE & STREETSCAPE DESIGN
ALFRED BENESCH & COMPANY
1300 W. CANAL STREET, SUITE 150
MILWAUKEE, WI 53233

ATTN: WILLIAM ZIPPEL, PE
(414) 308-1321
wzippel@benesch.com

WDNR CONTACT

WISCONSIN DEPARTMENT
OF NATURAL RESOURCES
141 NW BARSTOW ST
WAUKESHA, WI 53188

ATTN: CRAIG WEBSTER
(262) 574-2141
Craig.Webster@wisconsin.gov

USACOE CONTACT

U.S. ARMY CORPS OF ENGINEERS
250 N. SUNNYSLOPE ROAD, SUITE 296
BROOKFIELD, WI 53005

ATTN: MARIE KOPKA
(262) 641-5498
Marie.H.Kopka@usace.army.mil

WAUKESHA COUNTY PARKS & LAND USE CONTACT

MR. LEIF HAUGE ,PE
lhauge@waukeshacounty.gov
1320 PEWAUKEE ROAD, RM 260
WAUKESHA, WI 53188
(262) 896-8304

DIGGERS HOTLINE
Dial 811 or (800) 242-8511
www.DiggersHotline.com

SPONSOR CONTACTS

WAUKESHA COUNTY DEPARTMENT
OF PUBLIC WORKS
515 W. MORELAND BLVD.
WAUKESHA, WI 53188

ALLISON BUSSLER
DIRECTOR OF PUBLIC WORKS
(262) 548-7740

ATTN: ED HINRICHS
PROJECT MANAGER
(262) 548-7745
ehinrichs@waukeshacounty.gov

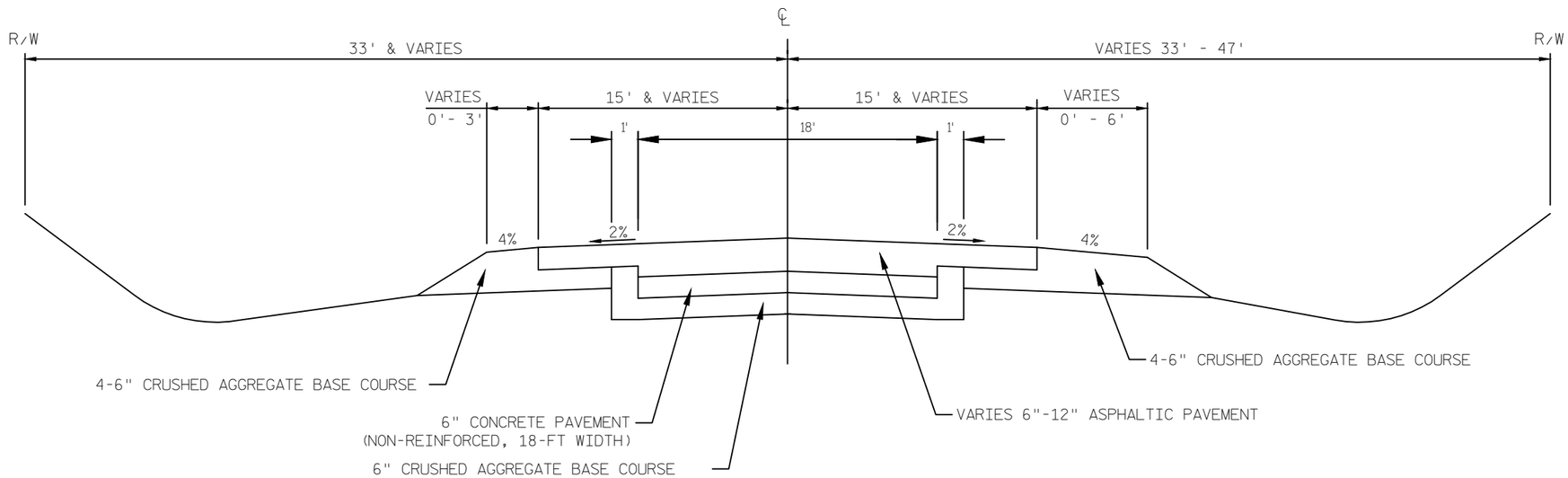

TYPICAL EXISTING SECTION
GENESEE STREET (C.T.H. "C")
STA. 130+54.26 TO STA. 154+50.00

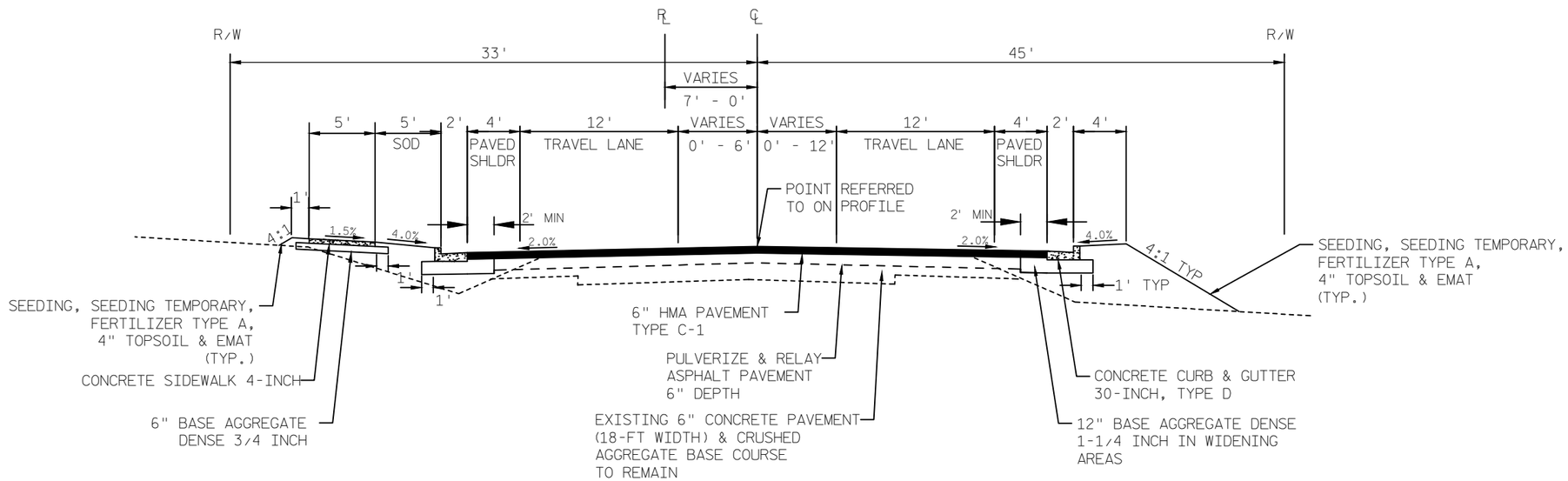

TYPICAL FINISHED SECTION
CTH "C"

132+86.2 TO 134+78.32

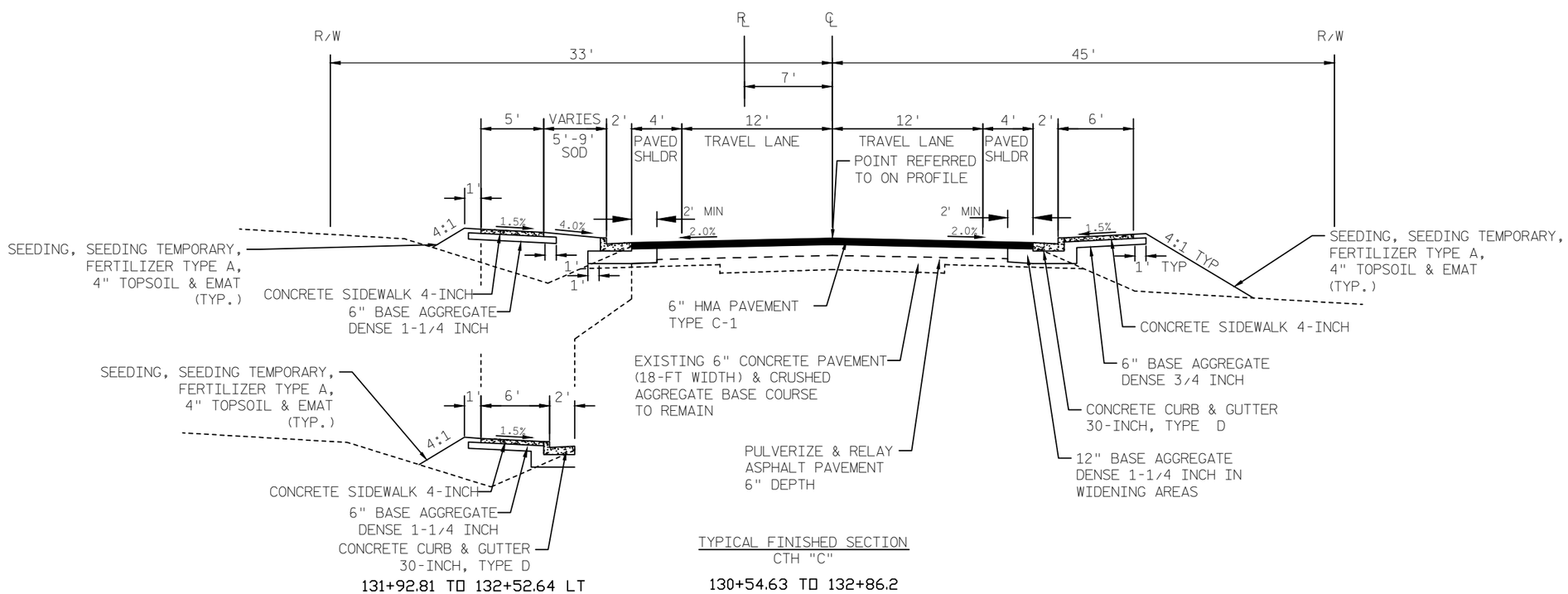

131+92.81 TO 132+52.64 LT

TYPICAL FINISHED SECTION
CTH "C"

130+54.63 TO 132+86.2

PROJECT NO: 14-3775 (11)	HWY: CTH "C"	COUNTY: WAUKESHA	PLAN: FINISHED TYPICAL SECTIONS: GENESEE STREET	SHEET 4	E

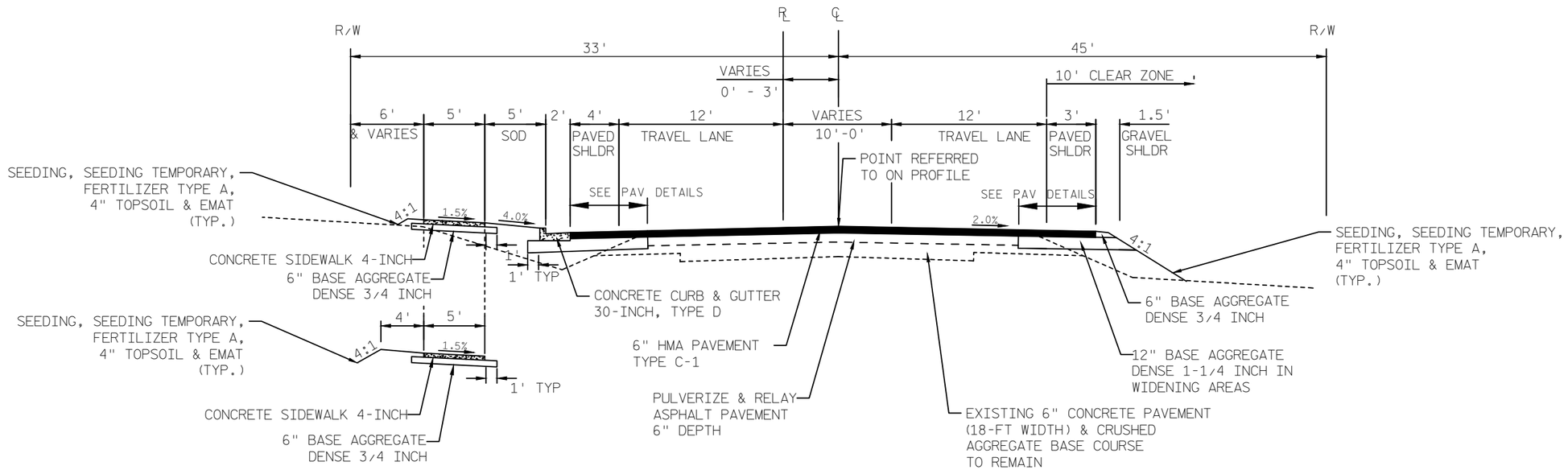

135+74.45 TO 137+18.98

TYPICAL FINISHED SECTION
CTH "C"

135+74.45 TO 137+56.25

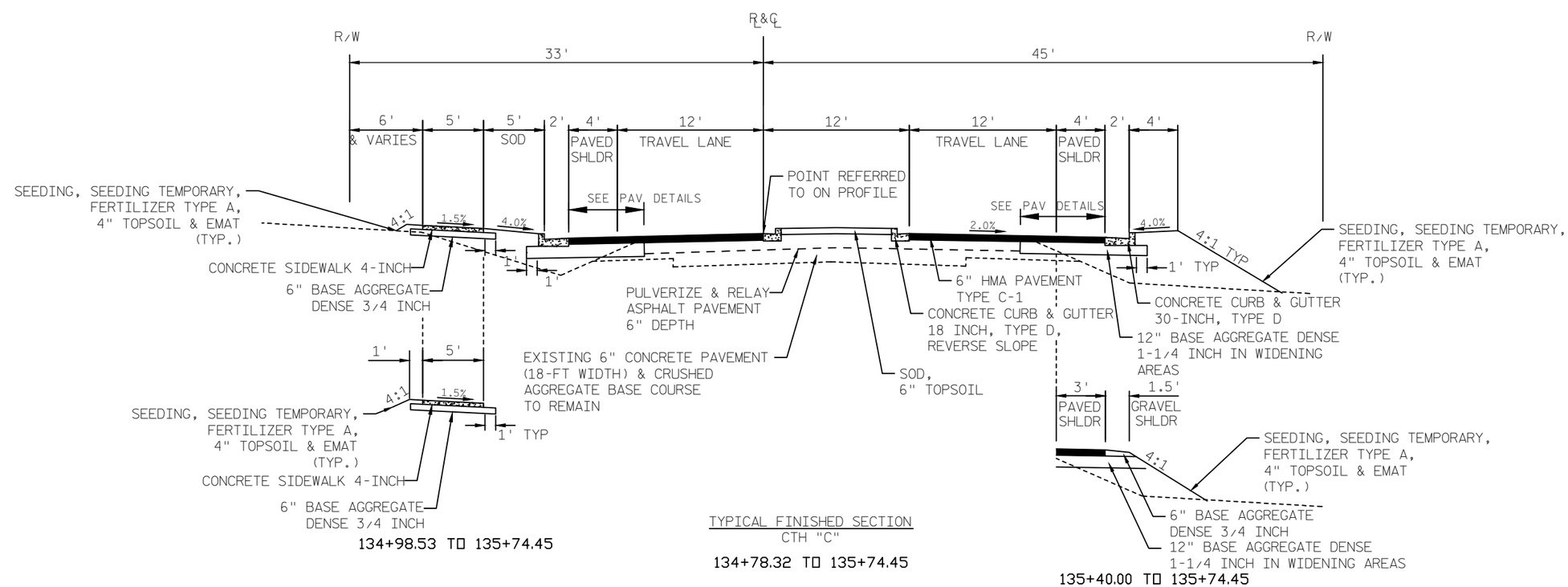

134+98.53 TO 135+74.45

TYPICAL FINISHED SECTION
CTH "C"

134+78.32 TO 135+74.45

135+40.00 TO 135+74.45

PROJECT NO: 14-3775 (11)	HWY: CTH "C"	COUNTY: WAUKESHA	PLAN: FINISHED TYPICAL SECTIONS: GENESEE STREET	SHEET 5	E

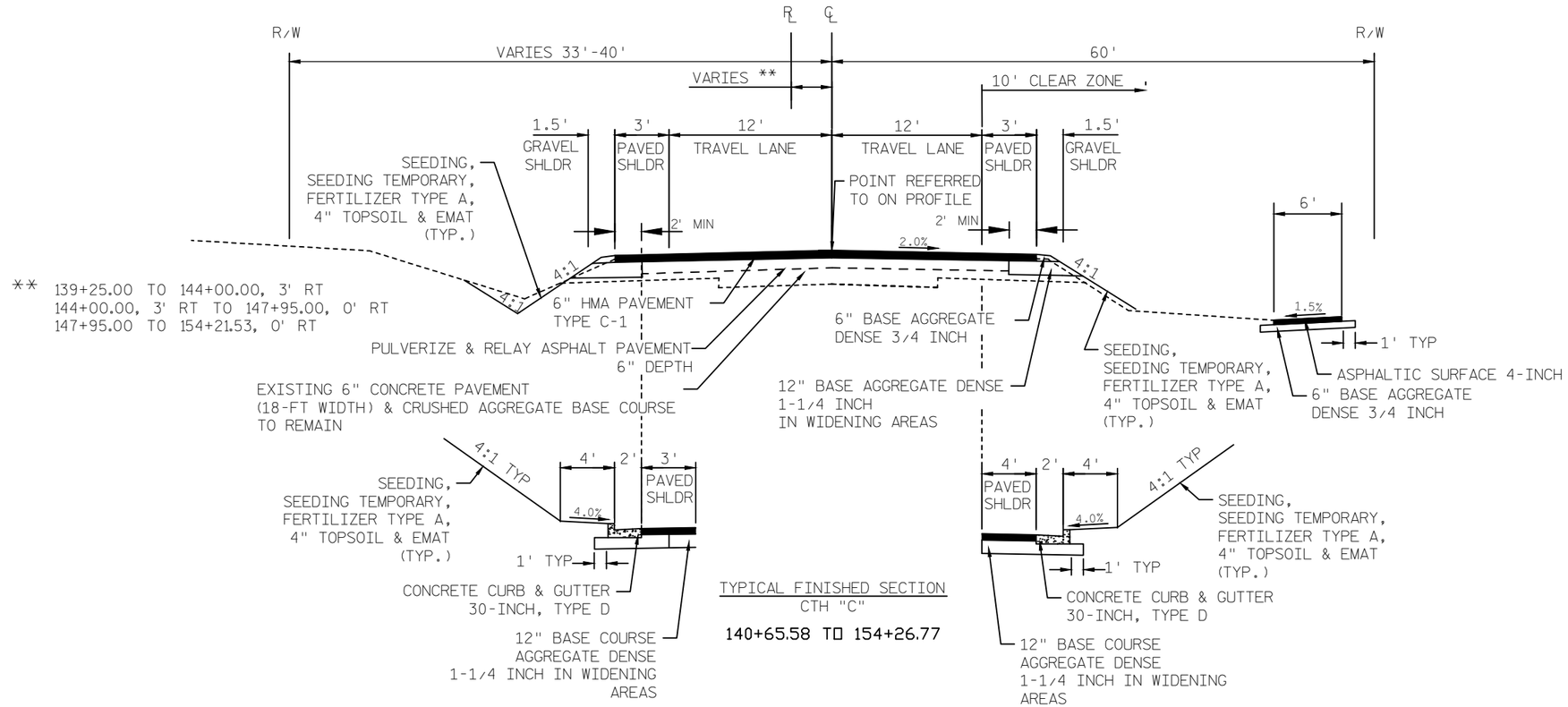

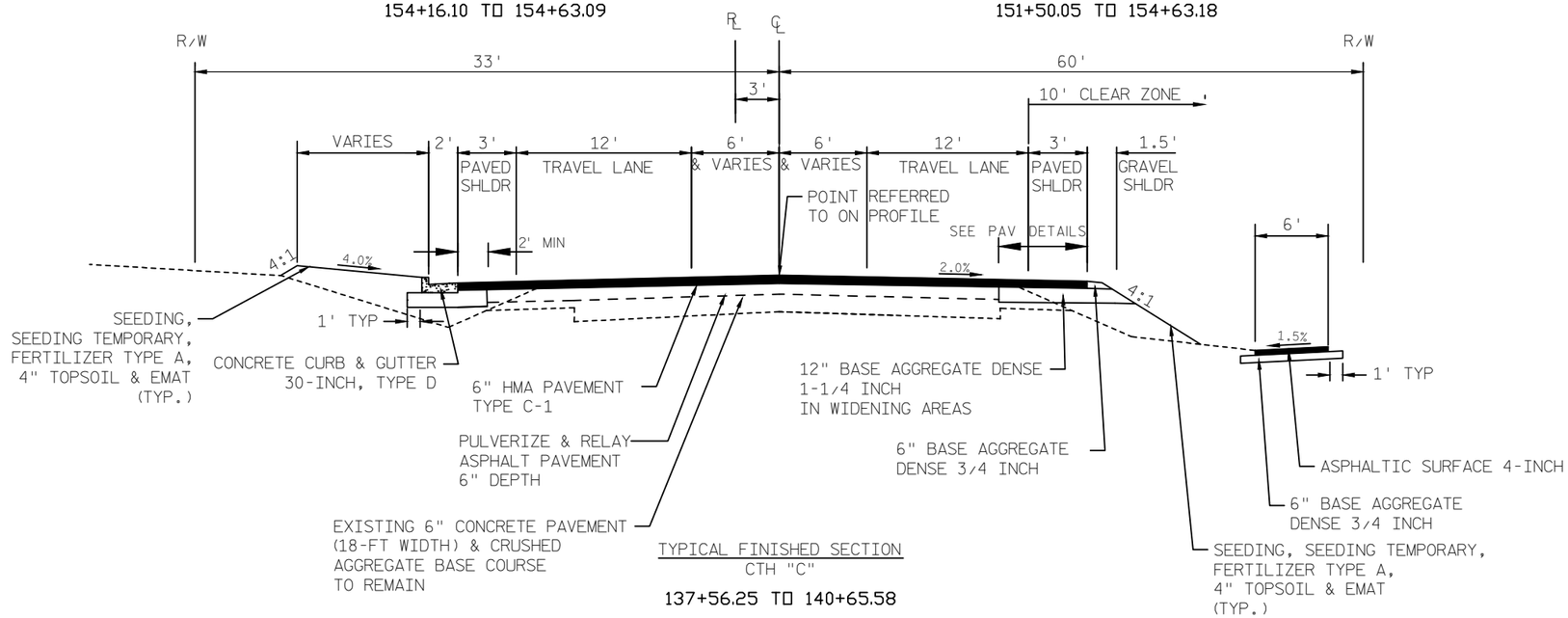

PROJECT NO: 14-3775 (11)	HWY: CTH "C"	COUNTY: WAUKESHA	PLAN: FINISHED TYPICAL SECTIONS: GENESEE STREET	SHEET 6	E

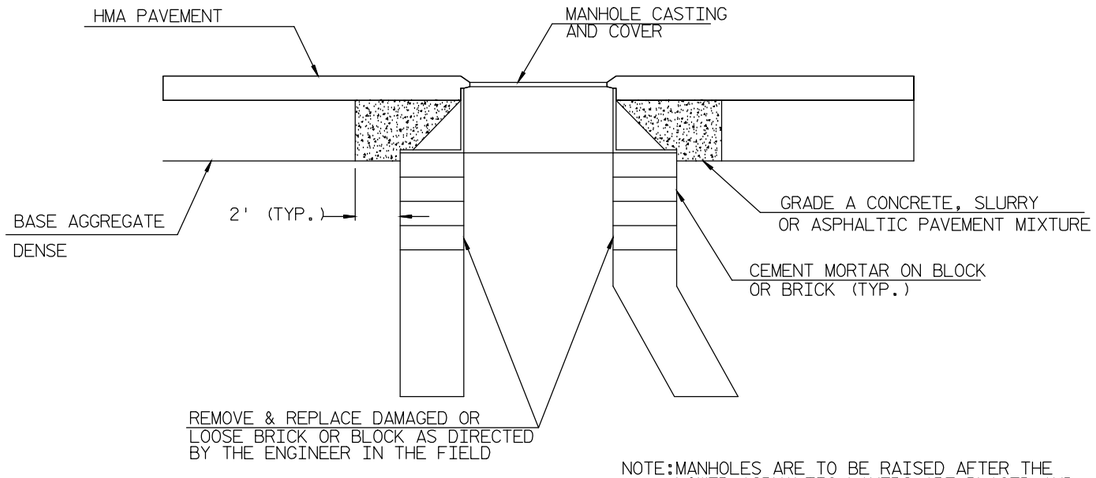

NOTE: 12 INCHES OR LESS OF ADJUSTMENT SHALL BE PAID FOR AS "ADJUSTING MANHOLE COVERS". GREATER THAN 12 INCHES OF ADJUSTMENT SHALL BE PAID FOR AS "RECONSTRUCTING MANHOLE".

NOTE: MANHOLES ARE TO BE RAISED AFTER THE LOWER ASPHALTIC LAYERS ARE PLACED AND BEFORE THE FINISHED SURFACE LAYER. DISTURBED ASPHALTIC PAVEMENT SHALL BE REPLACED WITH GRADE A CONCRETE, SLURRY OR ASPHALTIC PAVEMENT MIXTURE SHALL BE INCIDENTAL TO BID ITEM OF ADJUSTING MANHOLE COVERS.

ADJUSTING MANHOLE COVERS

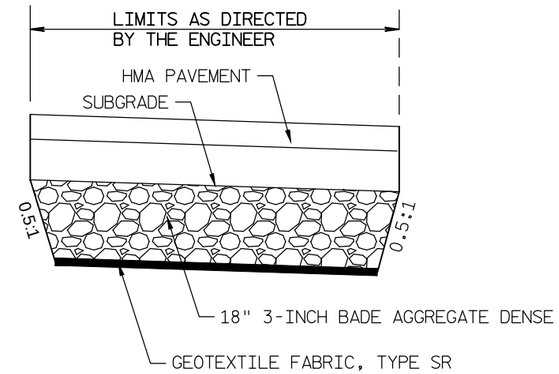

NOTES:
1. EXCAVATE AREA TO A DEPTH OF 18" BELOW SUBGRADE.
2. VIBRATORY CONSOLIDATE WITH SMOOTH DRUM ROLLER LOOSE BACKFILL AT BOTTOM OF EXCAVATION UNDER OBSERVATION OF ENGINEER.
3. IF FURTHER INSTABILITY IS OBSERVED, CEASE FURTHER VIBRATORY COMPACTION.
4. PLACE GEOTEXTILE FABRIC, TYPE SR.
5. PLACE FIRST 12-INCH LIFT AND STATICALLY ROLL GRANULAR BACKFILL MATERIAL. PLACE SECOND LIFT AND STATICALLY ROLL GRANULAR BACKFILL MATERIAL WITH SMOOTH DRUM ROLLER.
6. IF INSTABILITY IS OBSERVED CEASE COMPACTION EFFORTS AND CONSULT GEOTECHNICAL ENGINEER.

EXCAVATION BELOW SUBGRADE
AS DIRECTED BY THE ENGINEER

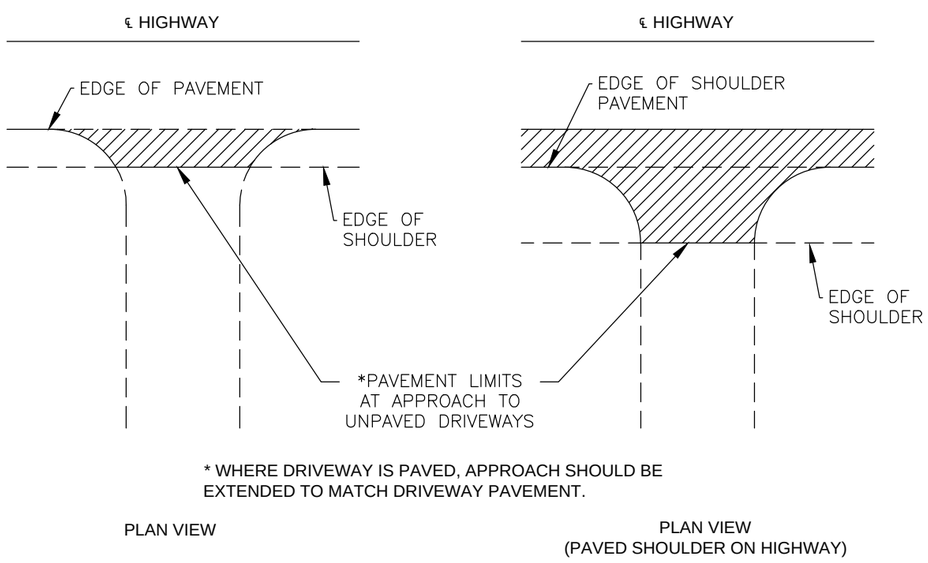

* WHERE DRIVEWAY IS PAVED, APPROACH SHOULD BE EXTENDED TO MATCH DRIVEWAY PAVEMENT.

PLAN VIEW

PLAN VIEW
(PAVED SHOULDER ON HIGHWAY)

TYPICAL PAVING LIMITS FOR DRIVEWAYS

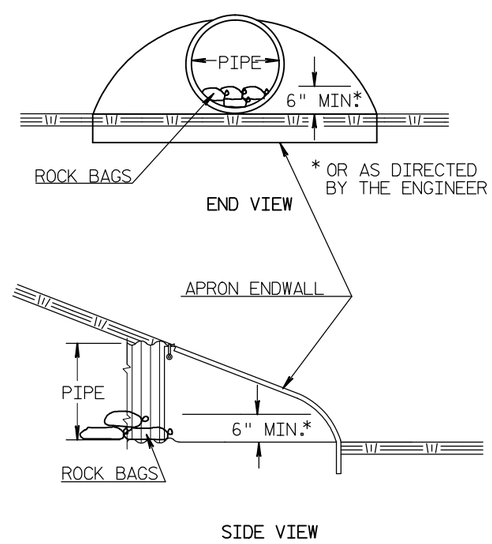

CULVERT PIPE CHECK

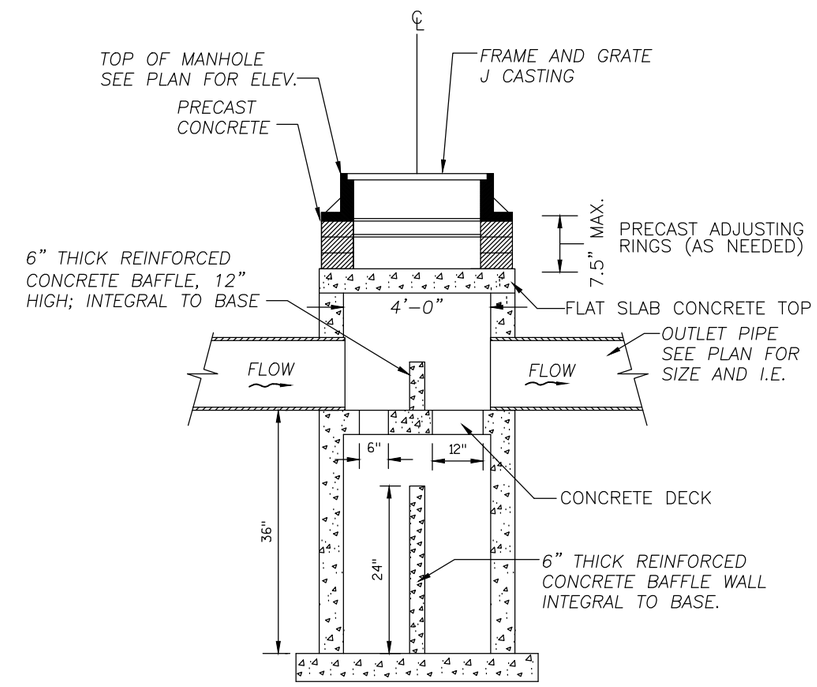

MANHOLE TYPE MM

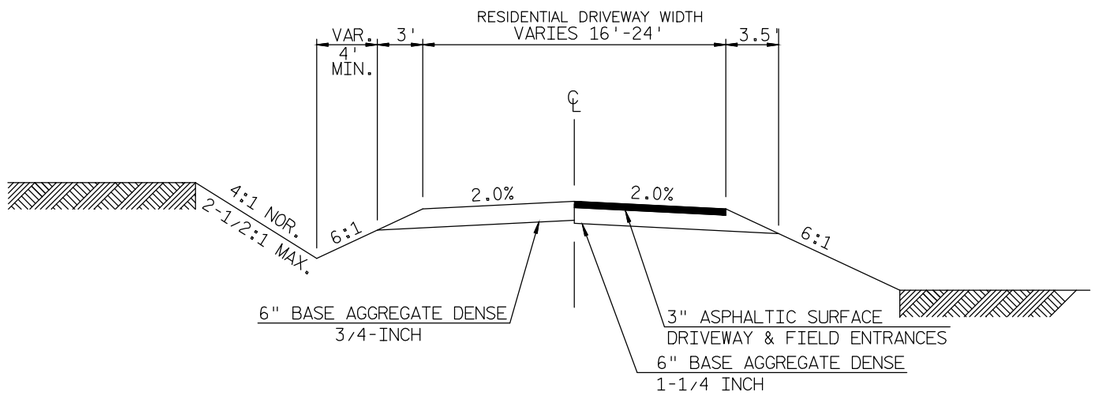

TYPICAL CROSS SECTION FOR PRIVATE DRIVE OR FIELD ENTRANCE

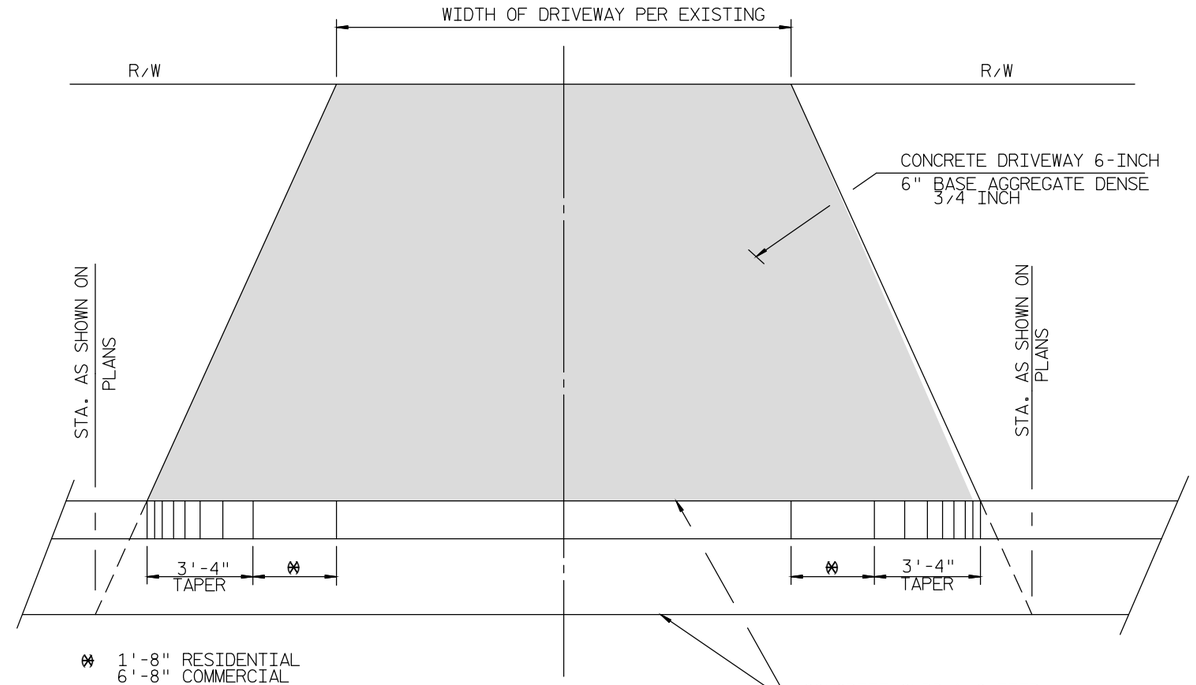

PLAN VIEW

PRIVATE ENTRANCES

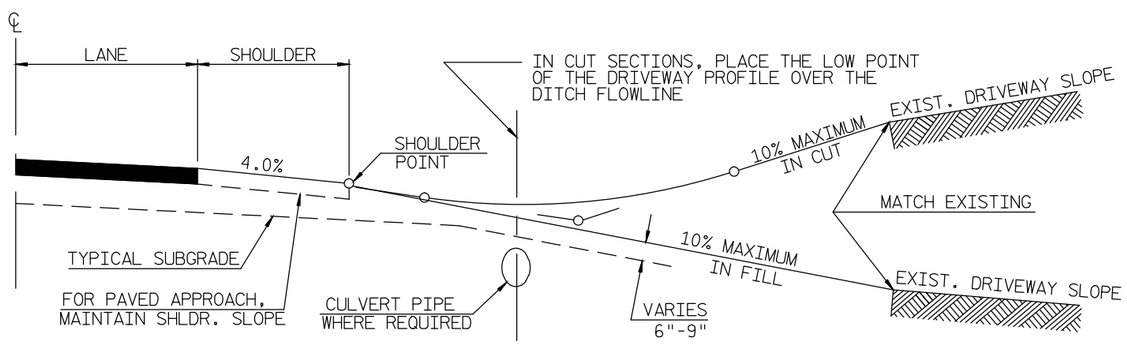

TYPICAL DRIVEWAY PROFILES

RURAL DRIVEWAY INTERSECTION DETAILS

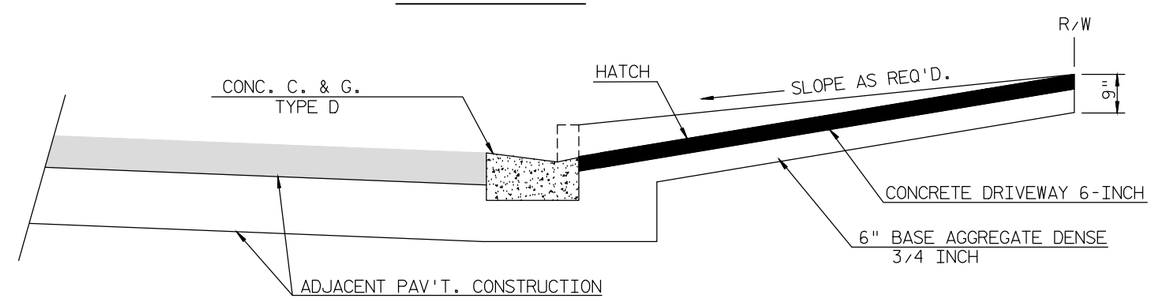

CROSS SECTION THRU DRIVEWAY

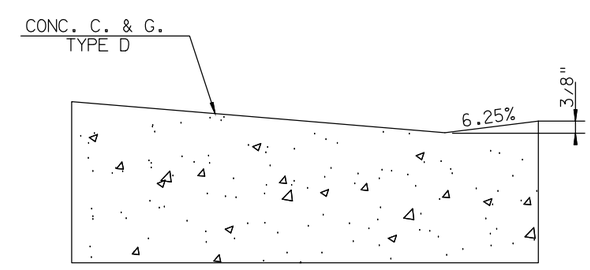

CURB AND GUTTER DETAIL AT DRIVEWAYS

2

MAINLINE LANE CLOSURE

LEGEND

- CHANNELIZING DEVICE
- PORTABLE SIGN SUPPORT
- WORK AREA
- TRAFFIC FLOW
- FLAGGER

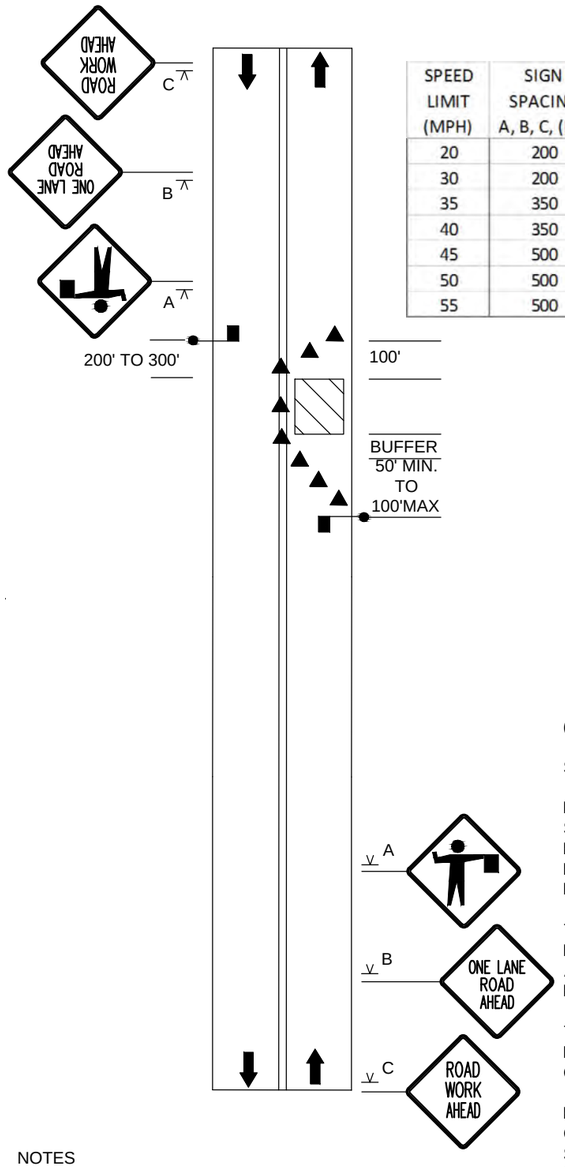

SPEED LIMIT (MPH)	SIGN SPACING A, B, C, (FT)	BUFFER (FT)
20	200	55
30	200	85
35	350	120
40	350	170
45	500	220
50	500	280
55	500	335

NOTES

1. DEPENDING ON TRAFFIC CONDITIONS, CONSIDER ADDITIONAL TRAFFIC CONTROL, SUCH AS FLAGGERS AND APPROPRIATE SIGNS.

GENERAL NOTES

SEE SDD 15C12-3 FOR ADDITIONAL INFORMATION

DETAILS OF TRAFFIC CONTROL DEVICES AND INSTALLATION NOT SHOWN ON THIS DRAWING SHALL CONFORM TO THE PERTINENT REQUIREMENTS OF THE STANDARD SPECIFICATION. THE SPECIAL PROVISIONS, AND THE MANUAL ON UNIFORM TRAFFIC CONTROL DEVISES.

THE EXACT NUMBER, LOCATION AND SPACING OF ALL SIGNS AND DEVICES (AND THE LOCATION OF TALL FLAGGERS) SHALL BE ADJUSTED TO FIT FIELD CONDITIONS AS DIRECTED BY THE ENGINEER.

THE FIRST ADVANCED WARNING SIGN SHOULD TYPICALLY BE LOCATED IN ADVANCE OF THE ANTICIPATED TRAFFIC BACKUP OR QUEUE.

FLAGGERS SHALL BE IN SIGHT OF EACH OTHER OR IN DIRECT COMMUNICATION AT ALL TIMES. THEY SHALL BE EQUIPPED WITH STOP/SLOW PADDLES FASTENED ON SUPPORT STAFFS. WHEN THE FLAGGERS OPERATION IS NOT IN EFFECT, THE "FLAGGERS AHEAD", THE "ROAD CONSTRUCTION AHEAD", AND THE ONE LANE ROAD AHEAD" SIGNS SHALL BE COVERED OR REMOVED AND THE HIGHWAY RESTORED TO NORMAL OPERATION.

ALL SIGNS ARE 48"X48" UNLESS OTHERWISE NOTED.

MAINLINE LANE CLOSURE NEAR SIDE ROAD INTERSECTION

LEGEND

- CHANNELIZING DEVICE
- PORTABLE SIGN SUPPORT
- WORK AREA
- TRAFFIC FLOW
- FLAGGER

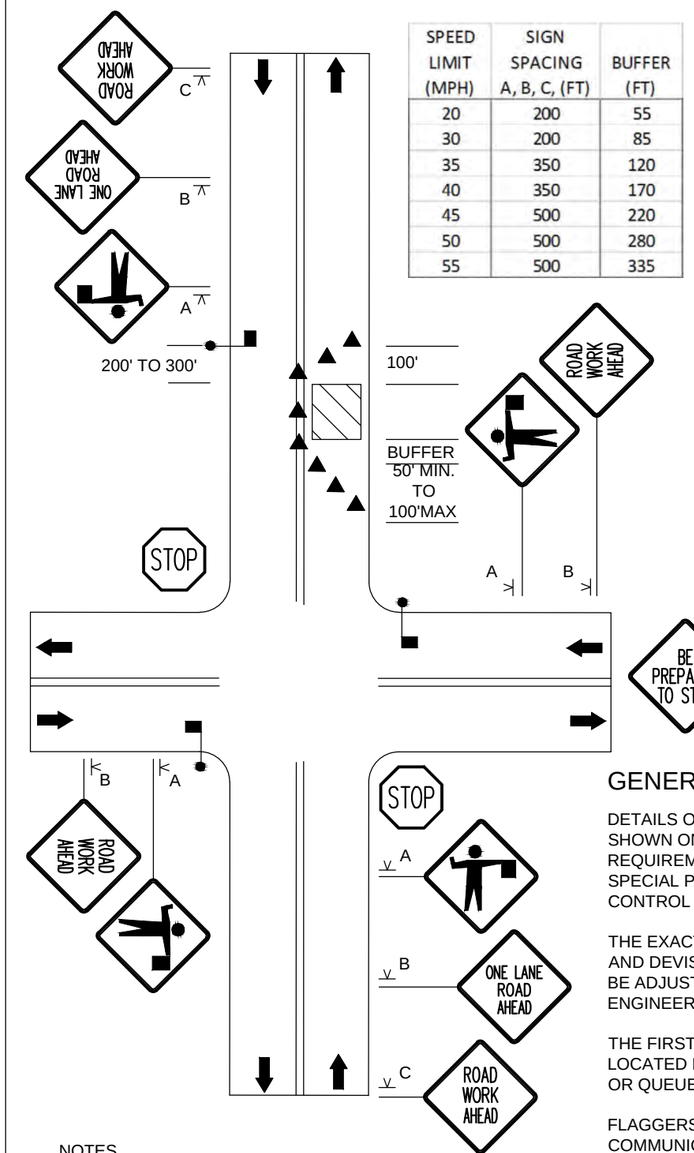

SPEED LIMIT (MPH)	SIGN SPACING A, B, C, (FT)	BUFFER (FT)
20	200	55
30	200	85
35	350	120
40	350	170
45	500	220
50	500	280
55	500	335

USE OF THE "BE PREPARED TO STOP" IS OPTIONAL. WHEN USED. THIS SIGN SHALL BE LOCATED BETWEEN THE W2-=7A AND W20-4 SIGNS. A 500' TYPICAL SPACING SHALL BE PROVIDED BETWEEN THE SIGNS

NOTES

1. DEPENDING ON TRAFFIC CONDITIONS, CONSIDER ADDITIONAL TRAFFIC CONTROL, SUCH AS FLAGGERS AND APPROPRIATE SIGNS.
2. THE MIDDLE FLAGGER WOULD NORMALLY BE LEAD FLAGGER AND WOULD COORDINATE THE OTHER FLAGGERS.

GENERAL NOTES

DETAILS OF TRAFFIC CONTROL DEVICES AND INSTALLATION NOT SHOWN ON THIS DRAWING SHALL CONFORM TO THE PERTINENT REQUIREMENTS OF THE STANDARD SPECIFICATION. THE SPECIAL PROVISIONS, AND THE MANUAL ON UNIFORM TRAFFIC CONTROL DEVICES.

THE EXACT NUMBER, LOCATION AND SPACING OF ALL SIGNS AND DEVISES (AND THE LOCATION OF TALL FLAGGERS) SHALL BE ADJUSTED TO FIT FIELD CONDITIONS AS DIRECTED BY THE ENGINEER.

THE FIRST ADVANCED WARNING SIGN SHOULD TYPICALLY BE LOCATED IN ADVANCE OF THE ANTICIPATED TRAFFIC BACKUP OR QUEUE.

FLAGGERS SHALL BE IN SIGHT OF EACH OTHER OR IN DIRECT COMMUNICATION AT ALL TIMES. THEY SHALL BE EQUIPPED WITH STOP/SLOW PADDLES FASTENED ON SUPPORT STAFFS. WHEN THE FLAGGERS OPERATION IS NOT IN EFFECT, THE "FLAGGERS AHEAD", THE "ROAD CONSTRUCTION AHEAD", AND THE ONE LANE ROAD AHEAD" SIGNS SHALL BE COVERED OR REMOVED AND THE HIGHWAY RESTORED TO NORMAL OPERATION.

ALL SIGNS ARE 48"X48" UNLESS OTHERWISE NOTED.

RUNOFF COEFFICIENT TABLE

	HYDROLOGIC SOIL GROUP											
	A			B			C			D		
	SLOPE RANGE (PERCENT)			SLOPE RANGE (PERCENT)			SLOPE RANGE (PERCENT)			SLOPE RANGE (PERCENT)		
LAND USE:	0-2	2-6	6 & OVER	0-2	2-6	6 & OVER	0-2	2-6	6 & OVER	0-2	2-6	6 & OVER
ROW CROPS	.08 .22	.16 .30	.22 .38	.12 .26	.20 .34	.27 .44	.15 .30	.24 .37	.33 .50	.15 .30	.28 .41	.38 .56
MEDIAN STRIP-	.19 .24	.20 .26	.24 .30	.19 .25	.22 .28	.26 .33	.20 .26	.23 .30	.30 .37	.20 .27	.25 .32	.30 .40
SIDE SLOPE-			.25 .32			.27 .34			.28 .36			.30 .38
PAVEMENT:												
ASPHALT	.70 - .95											
CONCRETE	.80 - .95											
BRICK	.70 - .80											
DRIVES, WALKS	.75 - .85											
ROOFS	.75 - .95											
GRAVEL ROADS, SHOULDERS	.40 - .60											

TOTAL PROJECT AREA = 5.00 ACRES
TOTAL AREA EXPECTED TO BE DISTURBED BY CONSTRUCTION ACTIVITIES = 4.619 ACRES

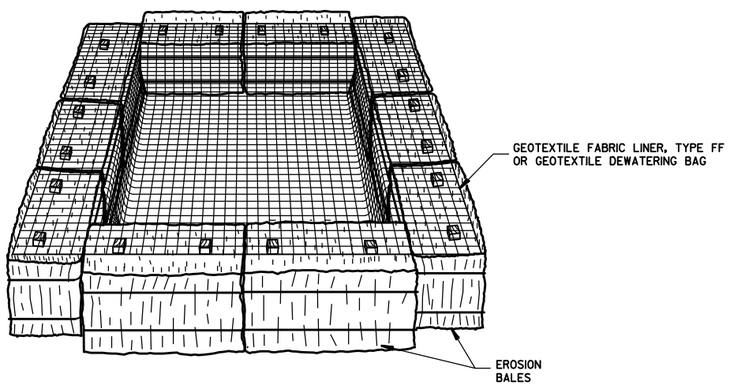

TEMPORARY SETTLING BASIN
"BAG IN A BALE"

(PAYMENT IS INCIDENTAL TO STRUCTURE EX.
STD. SPEC SEC. 206.5.2 & STORM SEWER
STD. SPEC SEC 607.5.1)

(SIZE TO BE DETERMINED IN FIELD AS INDICATED BELOW:)

STORAGE VOLUME (C.F.) = 16 X GPM (PUMP RATE)

EXAMPLE:
CONTRACTOR INDICATES PUMP CAPABLE OF 50 GPM
HEIGHT OF BALES = 1.5 FT.

SOLUTION:
SV (C.F.) = 16 X 50
SV = 800 C.F.

$\frac{800 \text{ C.F.}}{1.5 \text{ FT.}}$ = 533 S.F.

USE A 20 FT. X 27 FT. BASIN

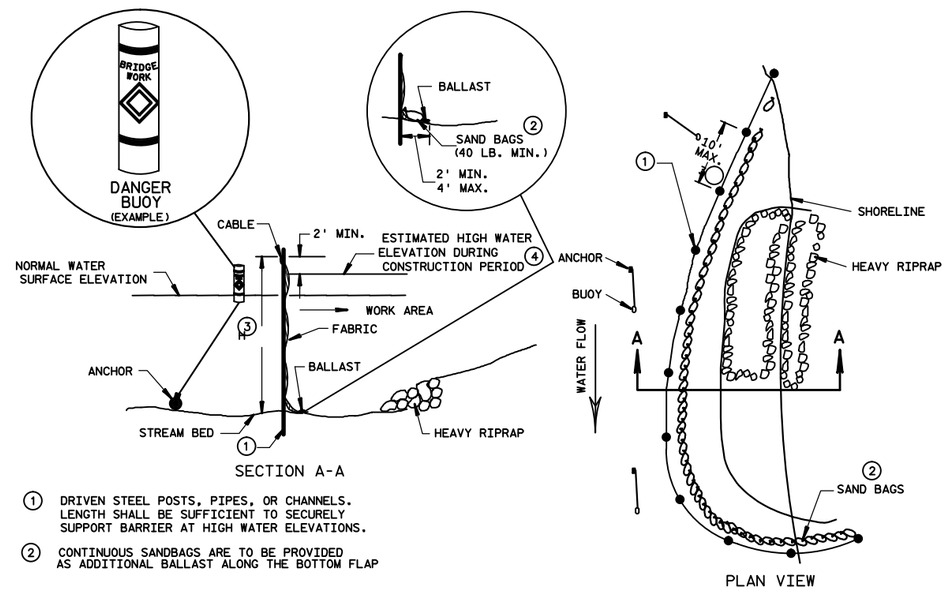

NOTES:

1. DRIVEN STEEL POSTS, PIPES, OR CHANNELS. LENGTH SHALL BE SUFFICIENT TO SECURELY SUPPORT BARRIER AT HIGH WATER ELEVATIONS.
2. CONTINUOUS SANDBAGS ARE TO BE PROVIDED AS ADDITIONAL BALLAST ALONG THE BOTTOM FLAP
3. WHEN BARRIER HEIGHT, H, EXCEEDS 8 FT., POST SPACING MAY NEED TO BE DECREASED.
4. ELEVATION VALUE TO BE ESTABLISHED BY THE CONTRACTOR BASED ON THE TIME OF YEAR AND DURATION OF THE ACTIVITY.

TURBIDITY BARRIER DETAIL

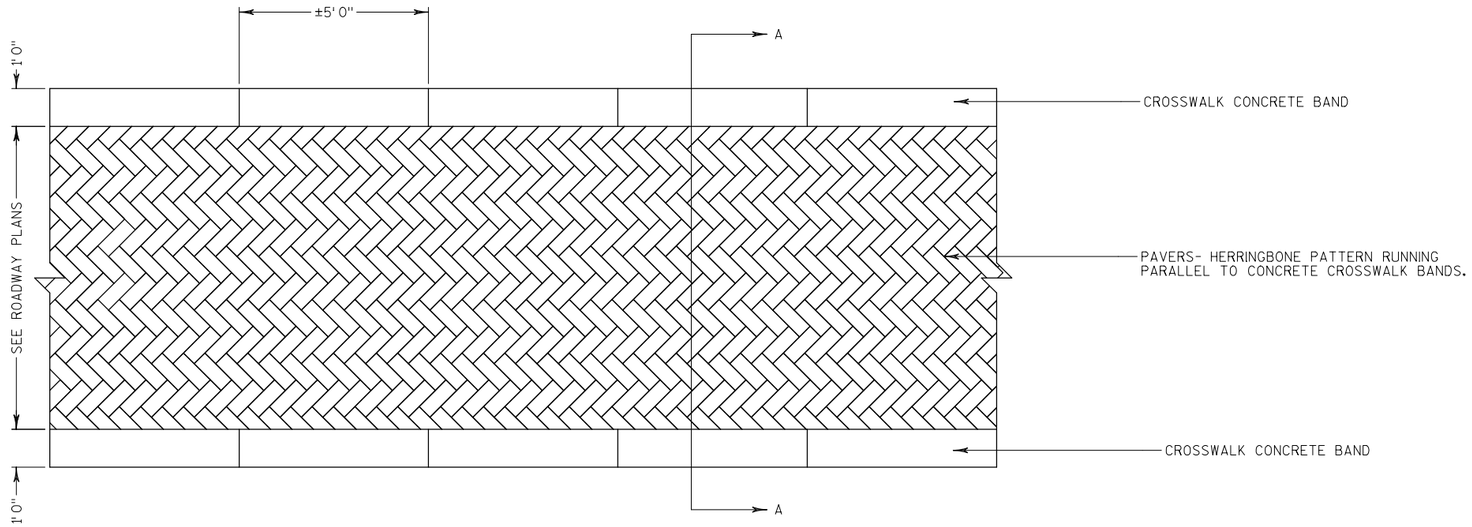

PAVER CROSSWALK

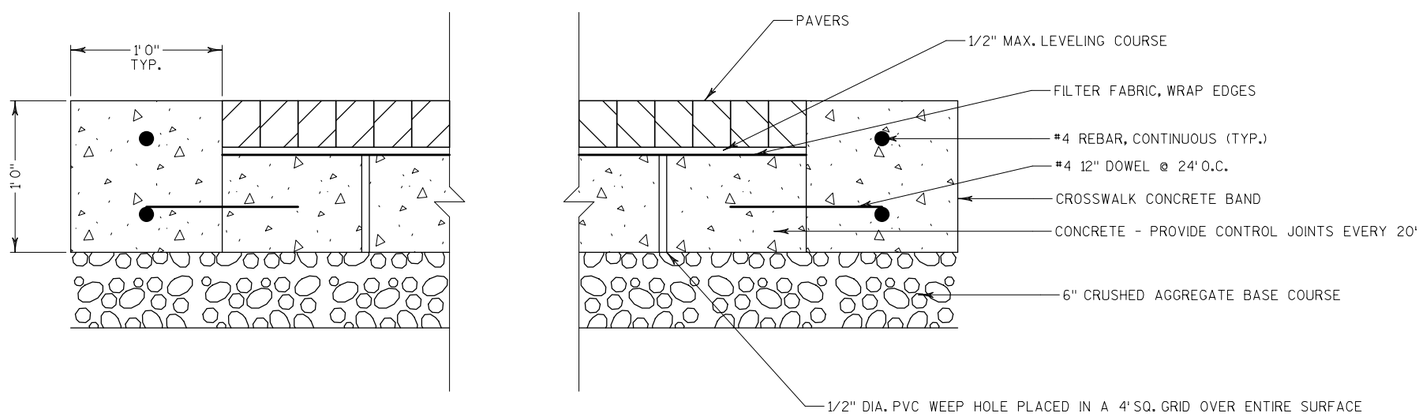

SECTION A-A

PROJECT NO:14-3775(11)	HWY: CTH "C"	COUNTY: WAUKESHA	CROSSWALK DETAILS	SHEET 11	E

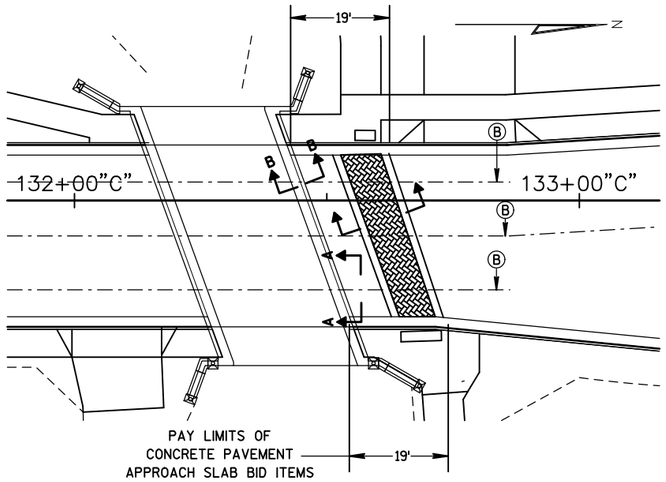

APPROACH SLAB

Ⓑ STANDARD LONGITUDINAL JOINT WITH TIE BARS. SEE PLAN DETAILS.

GENERAL NOTES

THE CONTRACTOR MAY SPLICE NO. 6 BARS IN THE APPROACH SLAB FOR SKEWED STRUCTURES ONLY. STAGGER SPLICES WITH A MAXIMUM OF ONE SPLICE PER BAR. THE LENGTH OF LAP IS 20 INCHES.

TACK WELD DOWEL BARS TO THE BASKETS ON ALTERNATE ENDS.

① THE CONTRACTOR MAY USE NO. 4 BARS SPACED AT 2'-0" C-C IN BOTH THE LONGITUDINAL AND TRANSVERSE DIRECTIONS FOR TOP REINFORCEMENT AS AN ALTERNATIVE TO THE WELDED WIRE FABRIC.

② THE CONTRACTOR MAY OMIT TIE BARS BETWEEN REINFORCED SLABS WHERE SLAB REINFORCEMENT BARS EXTEND ACROSS THE LONGITUDINAL JOINT.

③ USE A JOINT SEALANT MEETING THE REQUIREMENTS OF ASTM D6690.

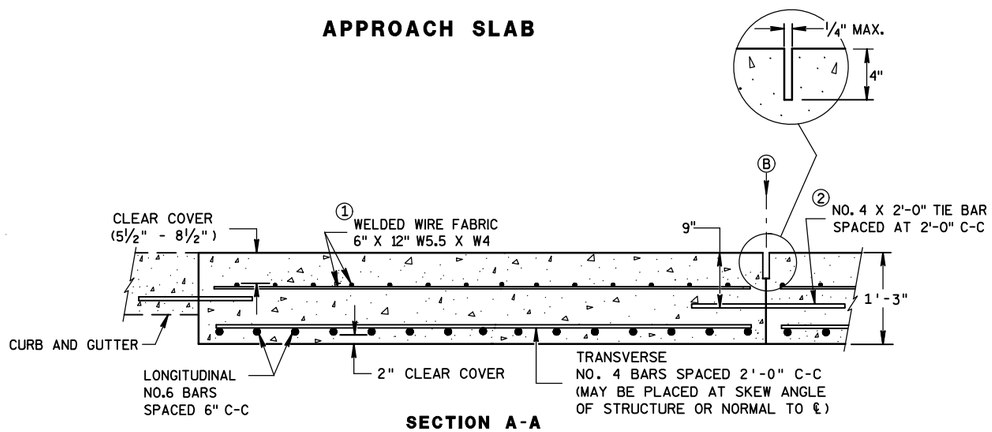

SECTION A-A

REINFORCEMENT POSITIONING DETAIL

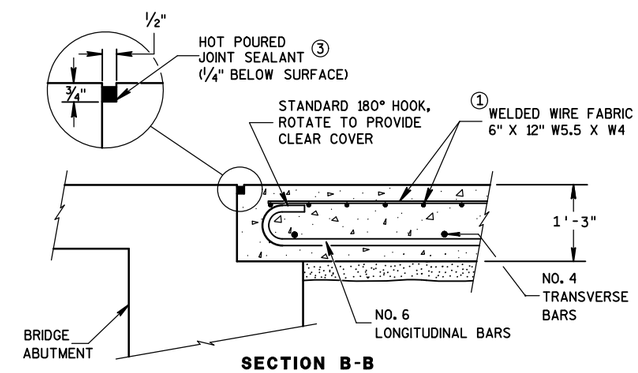

SECTION B-B

BEND DETAIL

BOTTOM REINFORCEMENT

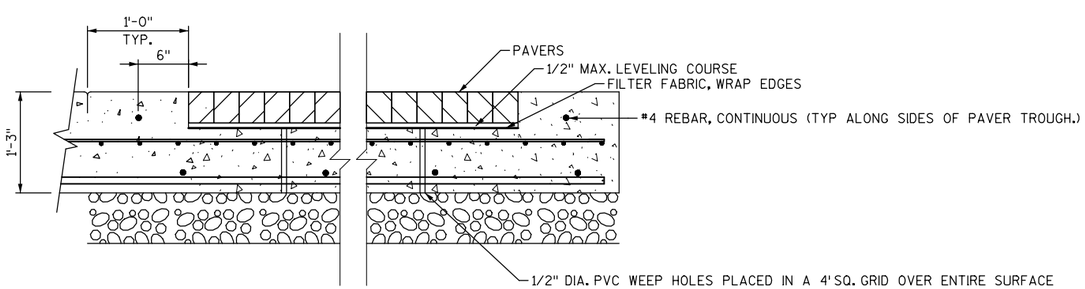

SECTION C-C

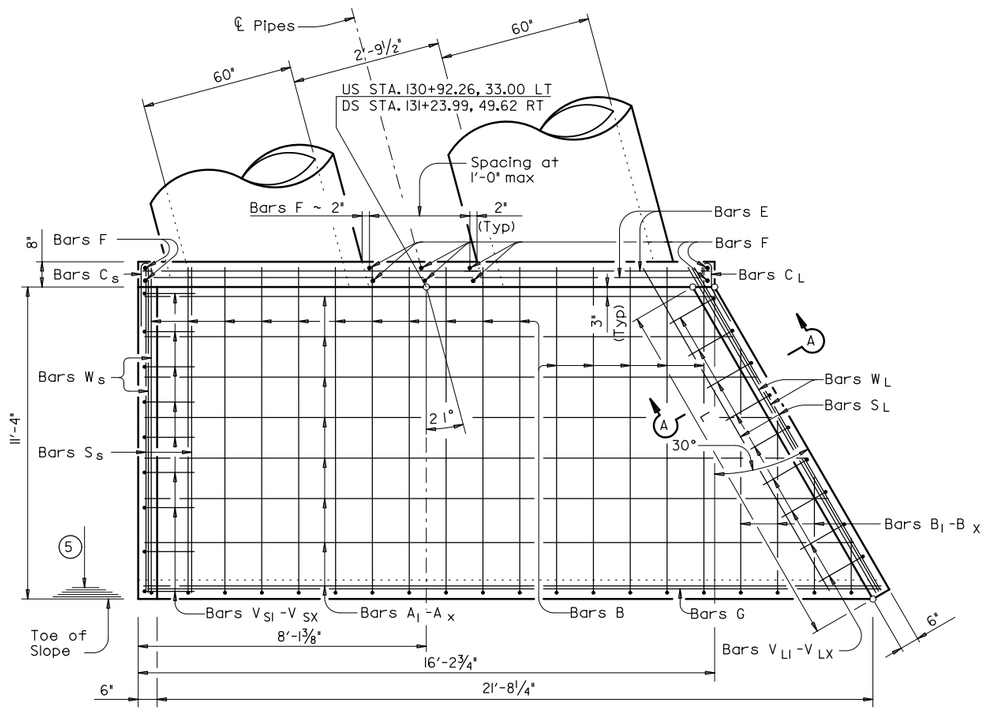

PLAN

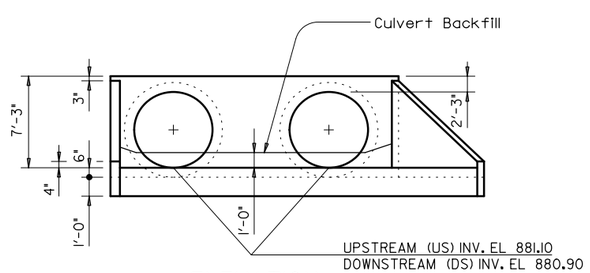

ELEVATION

Showing dimensions

(2) Provide a 1'-0" footing as shown where required to maintain 4" Min cover for pipes.

(3) Quantities shown are for one structure end only (one headwall).

(4) Min Length = 7 1/4"

Max Length = 6'-0 3/4"

(5) Lengths of wings based on 2:1 Slope along this line.

TABLE OF REINFORCING STEEL (3)			
Bar	Size	Spa	No.
A	#4	1'-0"	~
B	#3	1'-6"	~
CL	#4	1'-0"	~
CS	#4	1'-0"	~
D	#3	1'-0"	~
E	#5	~	6
F	#5	~	~
G	#3	~	2
SL	#4	~	3
SS	#4	~	3
V	#4	1'-0"	~
WL	#5	~	2
WS	#5	~	2

GENERAL NOTES:

1. Designed according to AASHTO LRFD Specifications.
2. Reinforcing steel shall be placed with the center of the outside layer of bars 2" from the surface of the concrete.
3. All reinforcing steel shall be Grade 60.
4. All concrete shall meet the requirements of Section 504 Concrete Masonry, Culverts and shall have a minimum compressive strength of 3600 psi.
5. No bridge rails of any type may be mounted directly to these culvert headwalls.

QUANTITIES FOR ONE HEADWALL

7.1 CY CONCRETE MASONRY
597 LBS REINFORCING STEEL

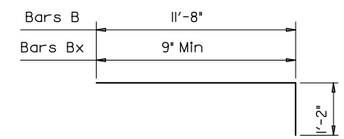

BARS B & B1 -B X

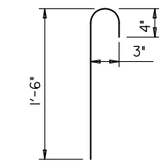

BARS C S
(2'-0" long)

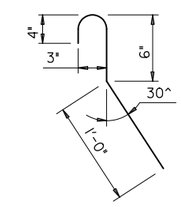

BARS C L
(2'-0" long)

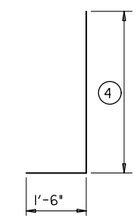

BARS V S & V L

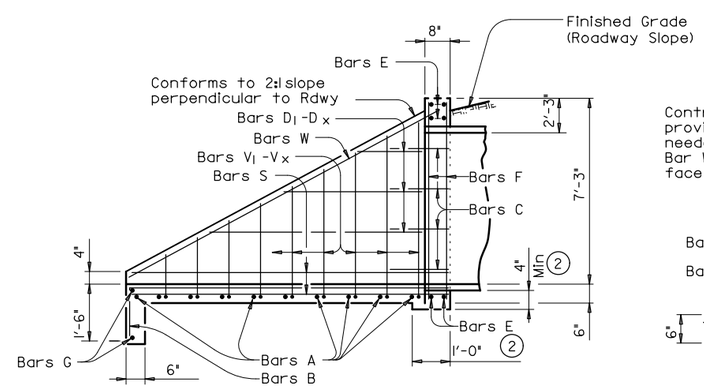

TYPICAL WING ELEVATION

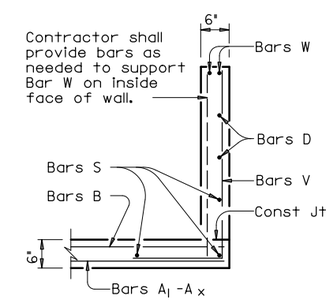

SECTION A-A

PROJECT NO:14-3775(11)	HWY: CTH "C"	COUNTY: WAUKESHA	CONCRETE ENDWALL 2x60-INCH RCP	SHEET 13	E

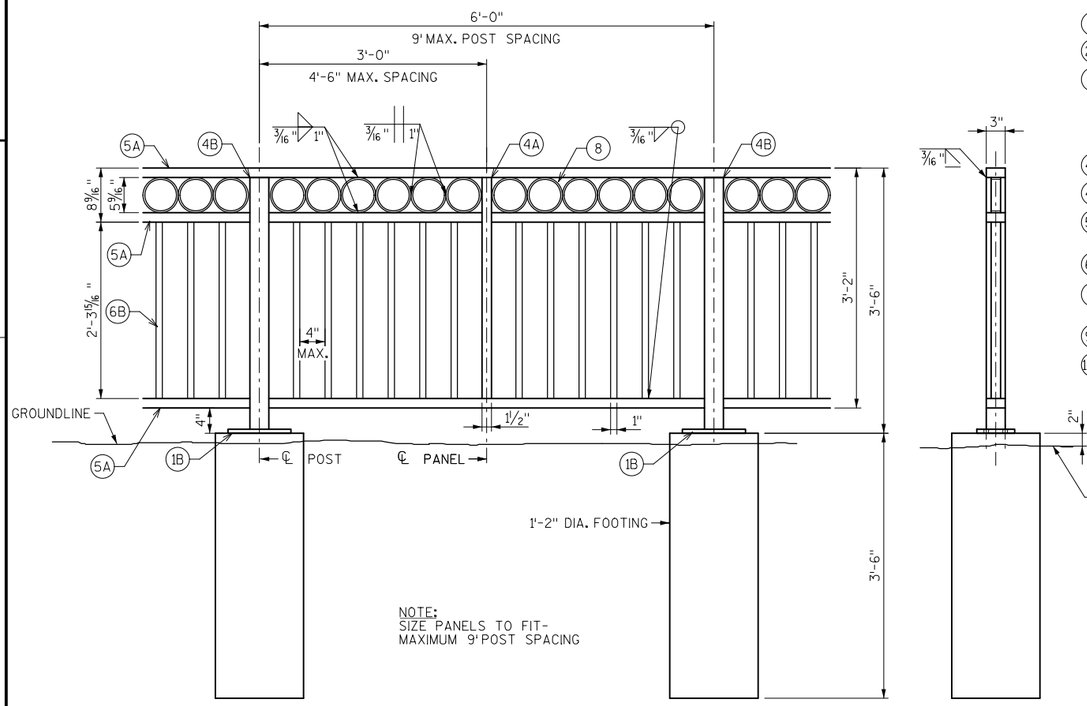

RAILING ELEVATION

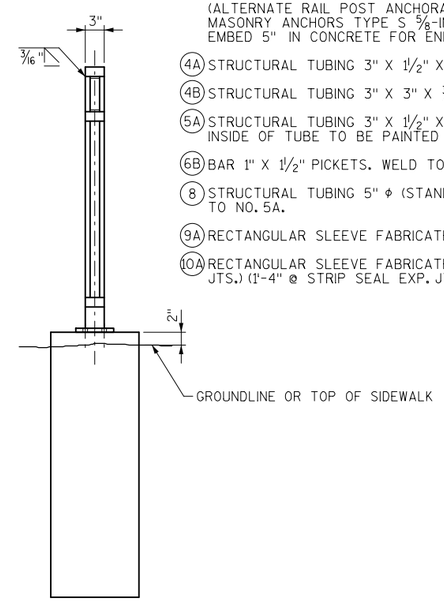

LEGEND

- (1B) PLATE 5/8" X 6" X 10" WITH 3/4" X 1 1/2" SLOTTED HOLES
- (2A) 1/4" X 5" X 0'-9" ANCHOR PLATE WITH 11/16" HOLES FOR ANCHOR BOLTS NO. 3.
- (3) 5/8" DIA. X 9" LONG, TYPE 316 STAINLESS STEEL THREADED RODS (MIN. TENSILE STRENGTH = 70 KSI) WITH NUT AND WASHERS OF SAME ALLOY GROUP. (ALTERNATE RAIL POST ANCHORAGE: 4 EQUIVALENT STAINLESS STEEL CONCRETE MASONRY ANCHORS TYPE S 5/8-INCH. EMBED 7" IN CONCRETE FOR RAIL POSTS. EMBED 5" IN CONCRETE FOR END RAILS.)
- (4A) STRUCTURAL TUBING 3" X 1 1/2" X 3/16". PLACE VERTICAL. WELD TO NO. 1 & 5.
- (4B) STRUCTURAL TUBING 3" X 3" X 3/16". PLACE VERTICAL. WELD TO NO. 1 & 5.
- (5A) STRUCTURAL TUBING 3" X 1 1/2" X 3/16" RAILS. WELD TO NO. 1 & NO. 4. INSIDE OF TUBE TO BE PAINTED AT ALL FIELD ERECTION & EXPANSION JOINTS.
- (6B) BAR 1" X 1 1/2" PICKETS. WELD TO NO. 5. PLACE VERTICAL.
- (8) STRUCTURAL TUBING 5" Φ (STANDARD SIZE) (5.563" O.D.) 1 1/2" LONG SLICES. WELD TO NO. 5A.
- (9A) RECTANGULAR SLEEVE FABRICATED FROM 3/16" PLATES. PROVIDE "SLIDING FIT".
- (10A) RECTANGULAR SLEEVE FABRICATED FROM 3/16" PLATES. (1'-4" @ FIELD ERECTION JTS.) (1'-4" @ STRIP SEAL EXP. JTS.)

RAILING NOTES

BID ITEM SHALL BE "RAILING STEEL TYPE C1 GALVANIZED, WHICH SHALL INCLUDE ALL STEEL ITEMS SHOWN.

POST BASE PLATES SHALL BE FLAT WITH ALL SURFACES SMOOTH AND FREE FROM WARP AND ALL EDGES SMOOTH, STRAIGHT AND VERTICAL. ALL PLATE CUTS SHALL BE MACHINE OR MACHINE FLAME CUTS.

ALL PLATES, BARS, AND RECTANGULAR SLEEVES SHALL CONFORM TO ASTM A709 GRADE 36. ALL STRUCTURAL TUBING SHALL CONFORM TO ASTM A500 GRADE B.

ANCHORAGES SHALL BE ACCURATELY PLACED TO PROVIDE CORRECT ALIGNMENT OF RAILING. SET NORMAL TO GRADE.

CUT BOTTOM OF POST TO MAKE POST VERTICAL IN BOTH TRANSVERSE AND LONGITUDINAL DIRECTION.

STEEL SHIMS SHALL BE PROVIDED & USED UNDER BASE PLATES WHERE REQUIRED FOR ALIGNMENT, AND SHALL BE GALVANIZED.

CAULK AROUND PERIMETER OF BASE PLATES, NO. 1, AND FILL BOLT SLOT OPENINGS IN SHIMS AND BASE PLATES WITH NON-STAINING GRAY NON-BITUMINOUS JOINT SEALER.

ALL MATERIAL (EXCEPT NO. 3) SHALL BE GALVANIZED AFTER FABRICATION. PRIOR TO GALVANIZING, THE STEEL RAILING SHALL BE GIVEN A NO. 6 BLAST CLEANING PER SSPC SPECIFICATIONS. PAINT OVER GALVANIZING WITH AN APPROVED TIE COAT AND TOP COAT AS SPECIFIED IN THE "SPECIAL PROVISIONS." THE RAILING SHALL BE PAINTED FEDERAL COLOR NO. 17038, "BLACK."

VENT HOLES SHALL BE DRILLED IN POST AND RAIL MEMBERS AS REQUIRED TO FACILITATE GALVANIZING AND DRAINAGE.

TOUCH-UP PAINTING TO BE DONE AT COMPLETION OF STEEL RAILING INSTALLATION TO THE SATISFACTION OF THE ENGINEER AT NO EXTRA COST.

2

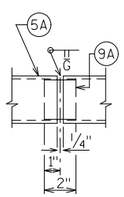

SHOP RAIL SPLICE DETAIL

(LOCATION MUST BE SHOWN ON SHOP DRAWINGS)

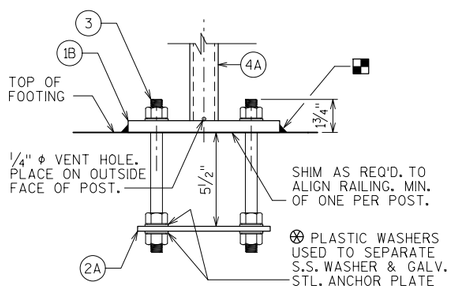

ANCHORAGE FOR RAIL POSTS

NOTE: ANCHOR PLATE NOT REQUIRED WHEN TYPE S ANCHORS ARE USED.

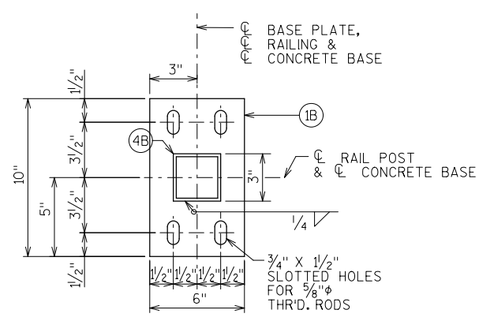

TYPICAL RAIL POST BASE PLATE

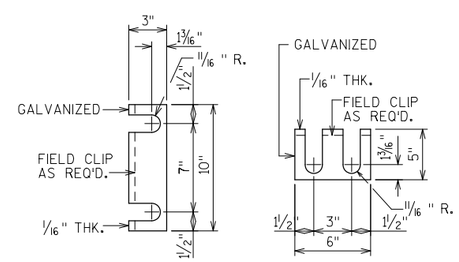

RAIL POST SHIM DETAIL

(2 SETS PER POST)

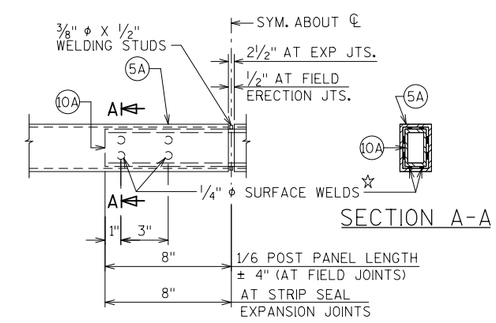

FIELD ERECTION JOINT DETAIL

☆ MIN. 5/8" FLAT SURFACE DIA. PUNCHINGS OR STUDS MAY BE USED AS AN ALTERNATE.

PROJECT NO:14-3775(11)	HWY: CTH "C"	COUNTY: WAUKESHA	RAILING DETAILS	SHEET 14	E

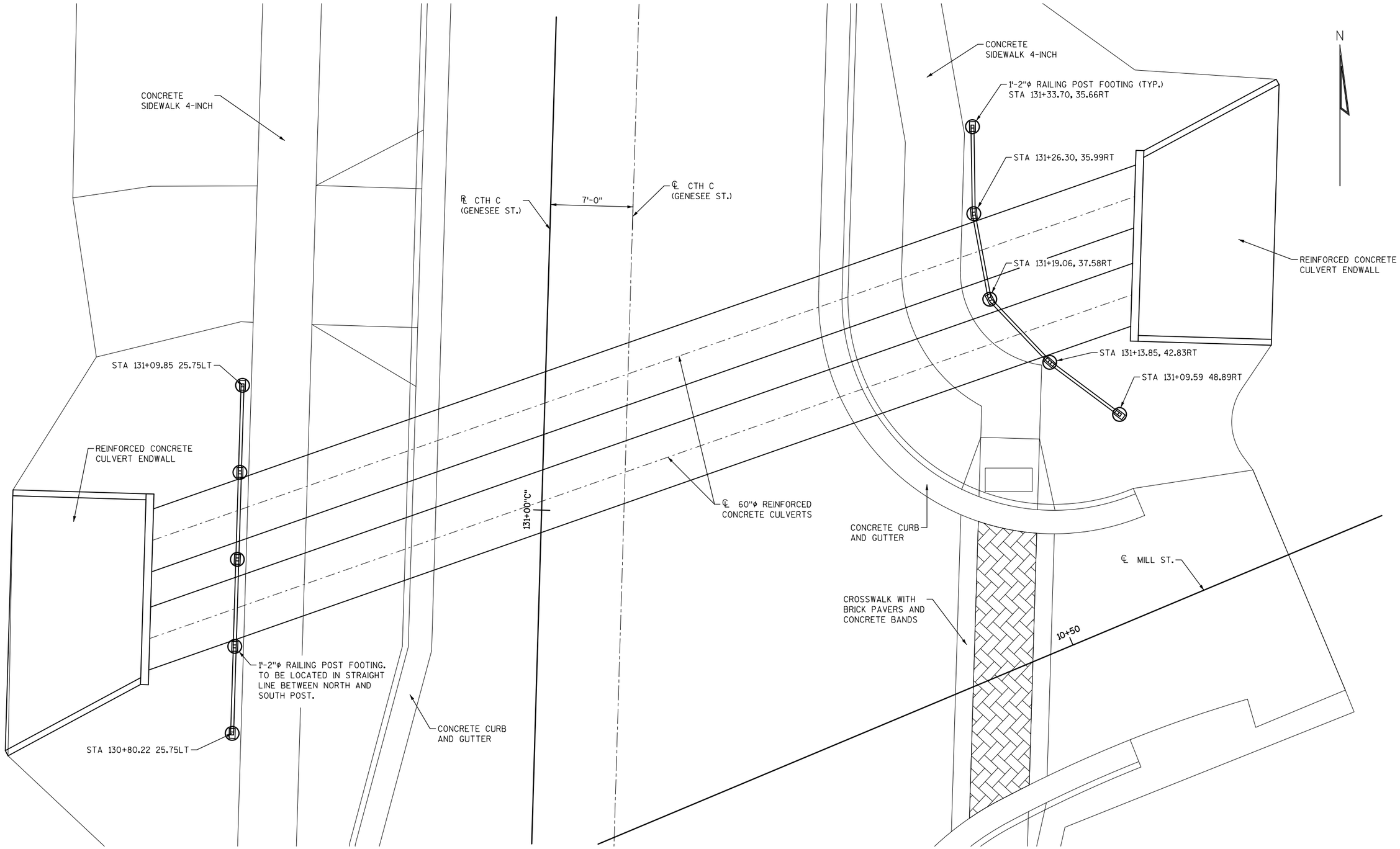

PROJECT NO:14-3775(11)	HWY: CTH "C"	COUNTY: WAUKESHA	RAILING POST LAYOUT	SHEET 15	E

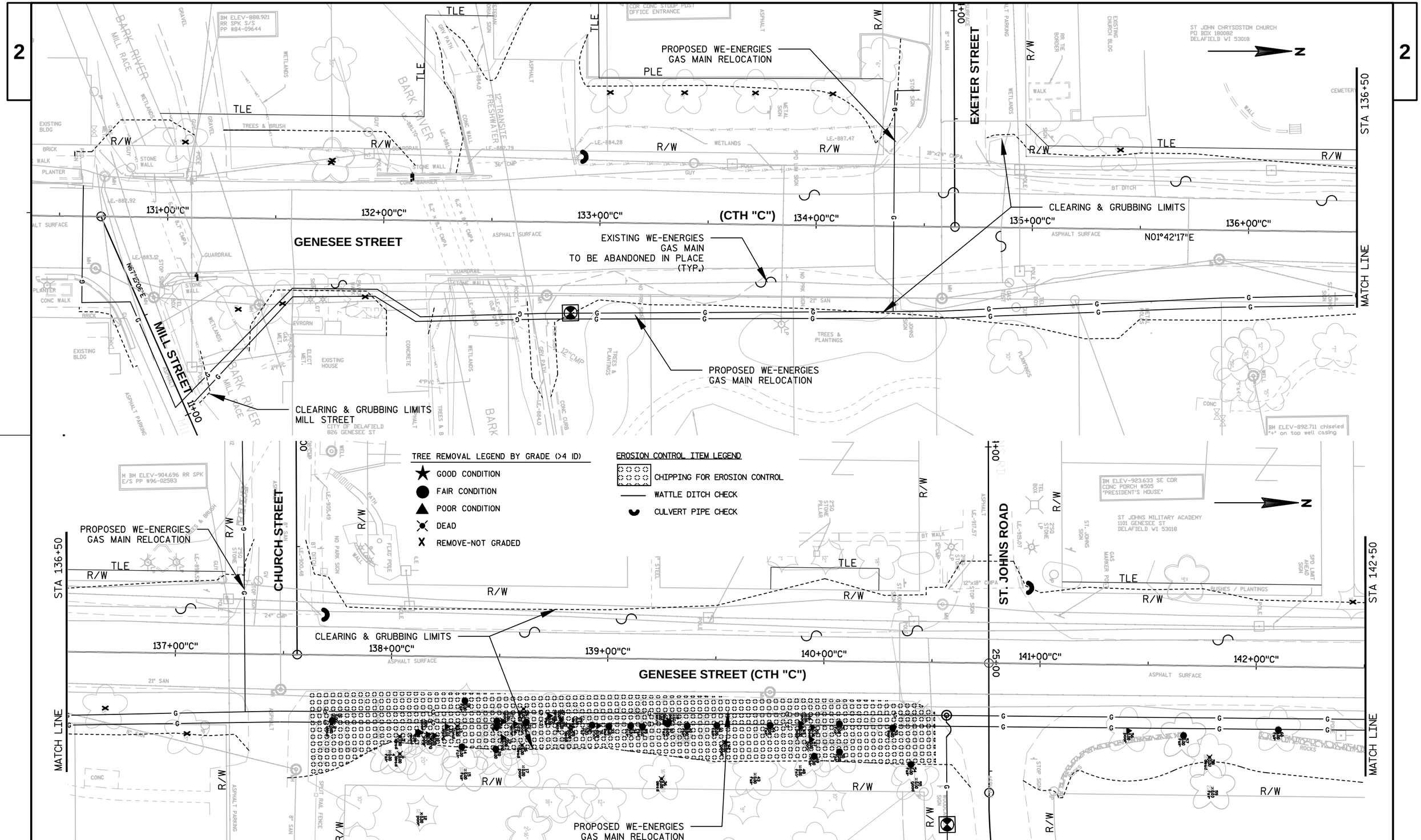

PROJECT NO:14-3775(11)	HWY: CTH "C"	COUNTY: WAUKESHA	CLEARING AND GRUBBING PLAN	SHEET 16	E

FILE NAME : S:\CAD PROJECTS\409-14 CTH C\SHT\14-3775(11) SHEET_TREE REMOVALS.DWG
LAYOUT NAME - ****
PLOT DATE : 1/6/2016 9:02 AM PLOT BY : HMERSON PLOT NAME : PLOT SCALE : **********

2

EXISTING WE-ENERGIES GAS MAIN TO BE ABANDONED IN PLACE (TYP.)

PROPOSED WE-ENERGIES GAS MAIN RELOCATION

WISCONSIN AVENUE

ANDERSON DRIVE

STA 142+50

STA 148+50

MATCH LINE

143+00"C" 144+00"C" 145+00"C" 146+00"C" 147+00"C" 148+00"C"

GENESEE STREET (CTH "C")

CLEARING & GRUBBING LIMITS

SAFETY FENCE (TYP.) TREES TO BE SAVED AS CONDITION ALLOWS

PROPOSED WE-ENERGIES GAS MAIN RELOCATION

SAFETY FENCE (TYP.) TREES TO BE SAVED AS CONDITION ALLOWS

TREE REMOVAL LEGEND BY GRADE (>4 ID)

- GOOD CONDITION
- FAIR CONDITION
- POOR CONDITION
- DEAD
- REMOVE-NOT GRADED

EROSION CONTROL ITEM LEGEND

- CHIPPING FOR EROSION CONTROL
- WATTLE DITCH CHECK
- CULVERT PIPE CHECK

STA 148+50

MATCH LINE

149+00"C" 150+00"C" 151+00"C" 152+00"C" 153+00"C" 154+00"C"

NO1°42'17"E

GENESEE STREET (CTH "C")

ST. JOHNS DRIVE

CLEARING & GRUBBING LIMITS

PROPOSED WE-ENERGIES GAS MAIN RELOCATION

SAFETY FENCE (TYP.) TREES TO BE SAVED AS CONDITION ALLOWS

PROPOSED WE-ENERGIES GAS MAIN RELOCATION

SAFETY FENCE (TYP.) TREES TO BE SAVED AS CONDITION ALLOWS

PROJECT NO:14-3775(11)	HWY:CTH "C"	COUNTY:WAUKESHA	CLEARING AND GRUBBING PLAN	SHEET 17	E

FILE NAME : S:\CAD PROJECTS\409-14 CTH C\SHT\14-3775(11) SHEET_TREE REMOVALS.DWG
LAYOUT NAME - ****

PLOT DATE : 1/6/2016 9:02 AM PLOT BY : HMERSON PLOT NAME : PLOT SCALE : **********

WISDOT/CADDS SHEET 42

2

PAVING DETAIL NOTES:

1. CURB ALIGNMENT AND ELEVATION INFORMATION IS TO THE FLANGE LINE.
2. CURB DIMENSIONS ARE MEASURED TO FLANGE.
3. SEE CURB RAMP DETAILS FOR ALL LAYOUT, WIDTH, SLOPE AND TYPES.
4. RADIUS AT CURB & GUTTER TO FACE OF CURB.

LEGEND

—x—	SAWING ASPHALT
CG-18D	CONCRETE CURB & GUTTER 18-INCH TYPE D
CG-30D	CONCRETE CURB & GUTTER 30-INCH TYPE D
SW-4	CONCRETE SIDEWALK 4-INCH
CD-6	CONCRETE DRIVEWAY 6-INCH
AD-3	ASPHALTIC DRIVEWAY 3-INCH
AP-4	ASPHALTIC SURFACE 4-INCH
GR-4	GRAVEL DRIVEWAY 4-INCH
BP-4	BRICK PAVERS

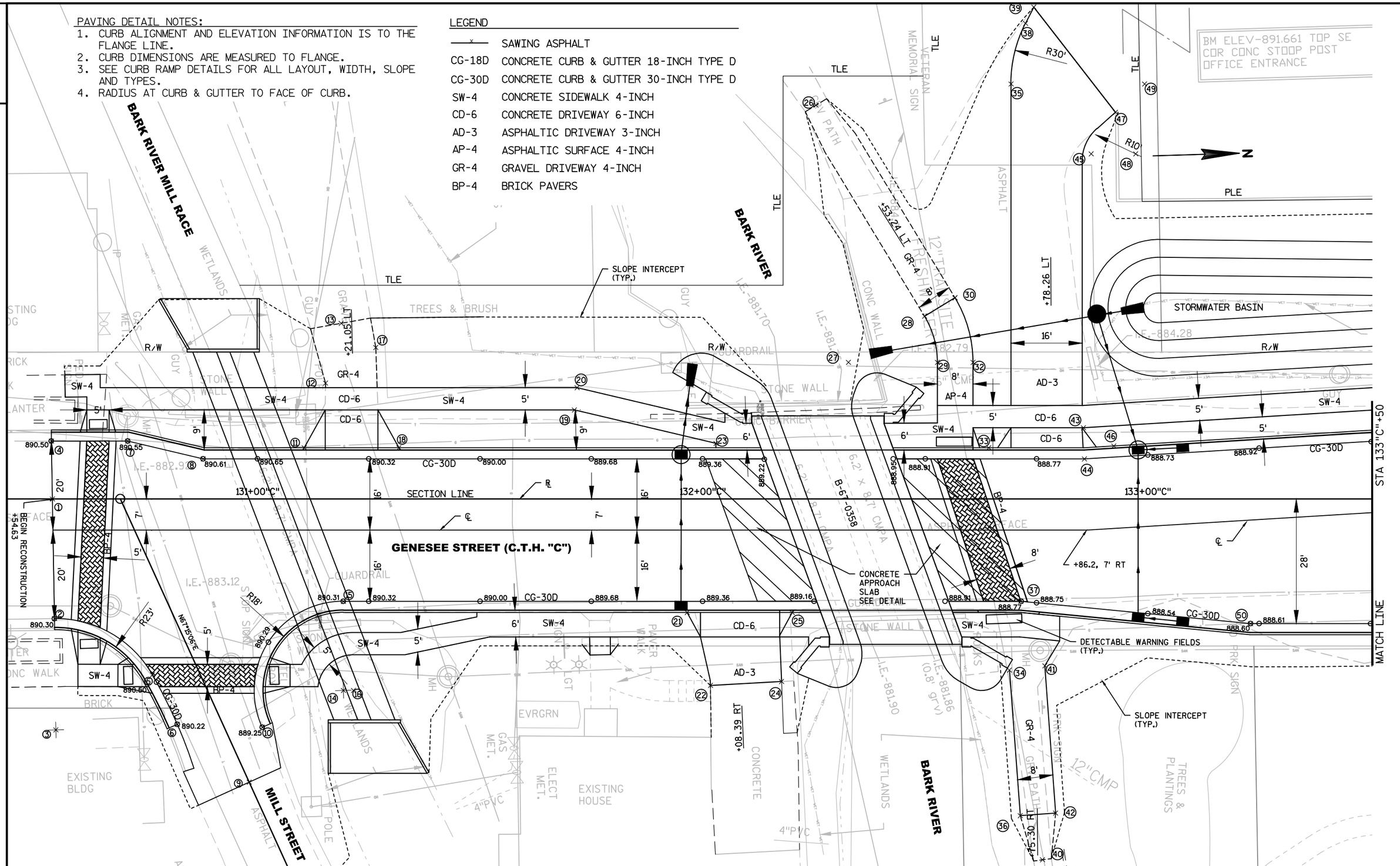

PROJECT NO:14-3775(11)	HWY:CTH "C"	COUNTY:WAUKESHA	PAVING DETAILS: 130+54.25 TO 133+50.00	SHEET 18	E

ST JOHN CHRYSOSTOM CHURCH
PO BOX 180082
DELAFIELD WI 53018

EXETER STREET
GENESEE STREET (C.T.H. "C")
STA 133"C"+50
STA 136"C"+50
MATCH LINE
134+00"C"
135+00"C"
136+00"C"
SECTION LINE
N01°42'17"E
STORMWATER BASIN
WETLANDS
DETECTABLE WARNING FIELDS (TYP.)
SLOPE INTERCEPT (TYP.)
END RECONSTRUCTION
BEGIN PULVERIZE AND RELAY
+81.6 BEGIN RESURFACING
CG-18D REJECT
ASPHALT SURFACE
SOD
+0.0, 0' RT
+76.6, 0' RT
+40.0, 12' RT
+66.5, 11' RT MOWER RAMP
TREES & PLANTINGS
PLANTINGS
CEMETERY
EXISTING CHURCH BLDG
PARKING
RR TIE BORDER
8" SAN
21" SAN
18"x24" CMPA
RT DITCH
CG-30D
SW-4
R43'
R18'
R5'

LEGEND

—x—	SAWING ASPHALT
CG-18D	CONCRETE CURB & GUTTER 18-INCH TYPE D
CG-30D	CONCRETE CURB & GUTTER 30-INCH TYPE D
SW-4	CONCRETE SIDEWALK 4-INCH
CD-6	CONCRETE DRIVEWAY 6-INCH
AD-3	ASPHALTIC DRIVEWAY 3-INCH
AP-4	ASPHALTIC SURFACE 4-INCH
GR-4	GRAVEL DRIVEWAY 4-INCH
BP-4	BRICK PAVERS

PAVING DETAIL NOTES:

1. CURB ALIGNMENT AND ELEVATION INFORMATION IS TO THE FLANGE LINE.
2. CURB DIMENSIONS ARE MEASURED TO FLANGE.
3. SEE CURB RAMP DETAILS FOR ALL LAYOUT, WIDTH, SLOPE AND TYPES.
4. RADIUS AT CURB & GUTTER TO FACE OF CURB.

PROJECT NO:14-3775(11)	HWY:CTH "C"	COUNTY:WAUKESHA	PAVING DETAILS: 133+50.00 TO 136+50.00	SHEET 19	E

2

PAVING DETAIL NOTES:

1. CURB ALIGNMENT AND ELEVATION INFORMATION IS TO THE FLANGE LINE.
2. CURB DIMENSIONS ARE MEASURED TO FLANGE.
3. SEE CURB RAMP DETAILS FOR ALL LAYOUT, WIDTH, SLOPE AND TYPES.
4. RADIUS AT CURB & GUTTER TO FACE OF CURB.

LEGEND

—×—	SAWING ASPHALT
CG-18D	CONCRETE CURB & GUTTER 18-INCH TYPE D
CG-30D	CONCRETE CURB & GUTTER 30-INCH TYPE D
SW-4	CONCRETE SIDEWALK 4-INCH
CD-6	CONCRETE DRIVEWAY 6-INCH
AD-3	ASPHALTIC DRIVEWAY 3-INCH
AP-4	ASPHALTIC SURFACE 4-INCH
GR-4	GRAVEL DRIVEWAY 4-INCH
BP-4	BRICK PAVERS

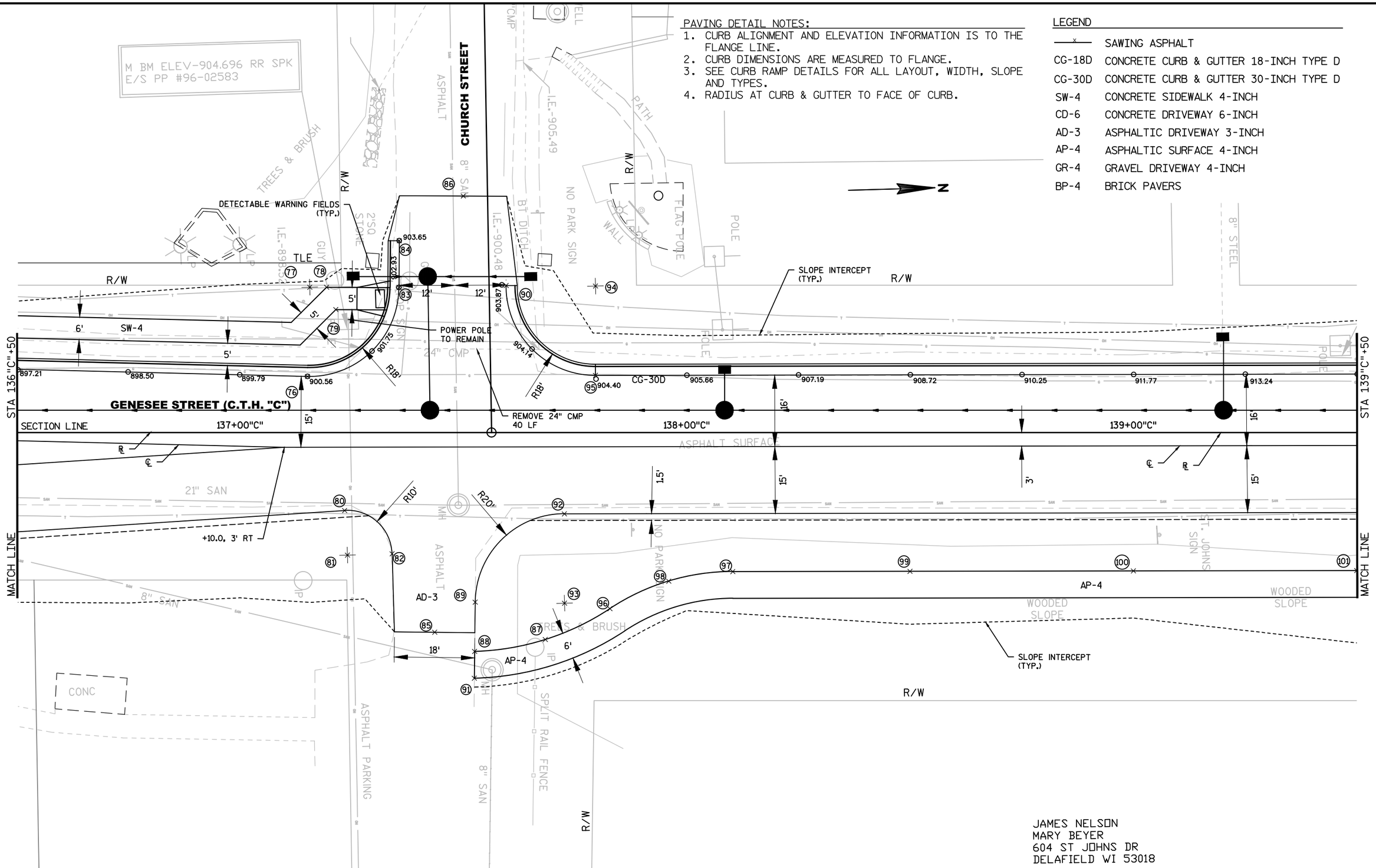

JAMES NELSON
MARY BEYER
604 ST JOHNS DR
DELAFIELD WI 53018

PROJECT NO:14-3775(11)	HWY:CTH "C"	COUNTY:WAUKESHA	PAVING DETAILS: 136+50.00 TO 139+50.00	SHEET 20	E

FILE NAME : S:\CAD PROJECTS\409-14 CTH C\SHT\14-3775(11) SHEET PAVING DETAILS.DWG
LAYOUT NAME - ####
PLOT DATE : 12/23/2015 12:02 PM PLOT BY : HMERSON PLOT NAME : PLOT SCALE : 1" = 20'_XREF

2

PAVING DETAIL NOTES:

1. CURB ALIGNMENT AND ELEVATION INFORMATION IS TO THE FLANGE LINE.
2. CURB DIMENSIONS ARE MEASURED TO FLANGE.
3. SEE CURB RAMP DETAILS FOR ALL LAYOUT, WIDTH, SLOPE AND TYPES.
4. RADIUS AT CURB & GUTTER TO FACE OF CURB.

LEGEND

—x—	SAWING ASPHALT
CG-18D	CONCRETE CURB & GUTTER 18-INCH TYPE D
CG-30D	CONCRETE CURB & GUTTER 30-INCH TYPE D
SW-4	CONCRETE SIDEWALK 4-INCH
CD-6	CONCRETE DRIVEWAY 6-INCH
AD-3	ASPHALTIC DRIVEWAY 3-INCH
AP-4	ASPHALTIC SURFACE 4-INCH
GR-4	GRAVEL DRIVEWAY 4-INCH
BP-4	BRICK PAVERS

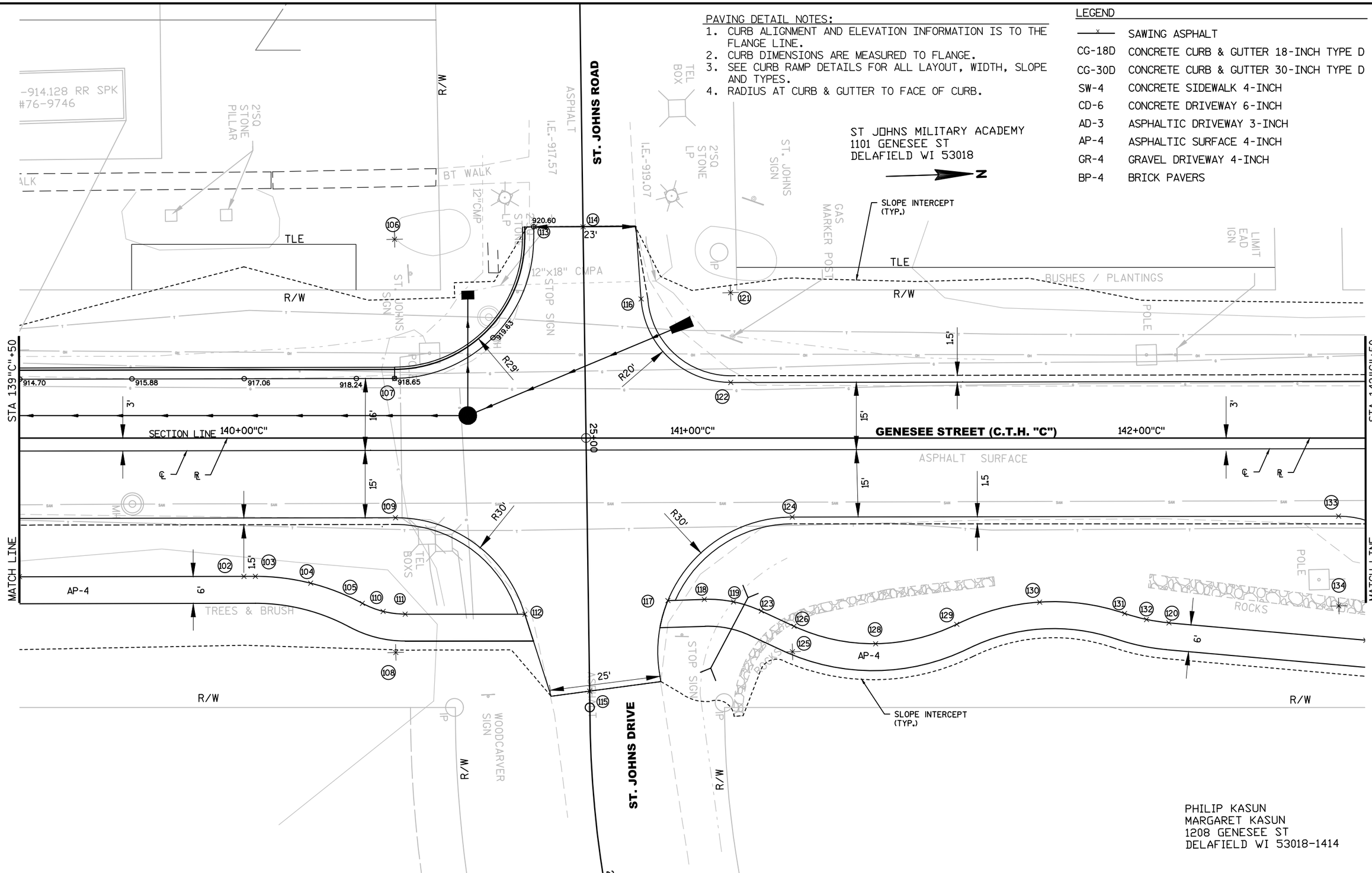

PHILIP KASUN
MARGARET KASUN
1208 GENESEE ST
DELAFIELD WI 53018-1414

PROJECT NO:14-3775(11)	HWY:CTH "C"	COUNTY:WAUKESHA	PAVING DETAILS: 139+50.00 TO 142+50.00	SHEET 21	E

PAVING DETAIL NOTES:

1. CURB ALIGNMENT AND ELEVATION INFORMATION IS TO THE FLANGE LINE.
2. CURB DIMENSIONS ARE MEASURED TO FLANGE.
3. SEE CURB RAMP DETAILS FOR ALL LAYOUT, WIDTH, SLOPE AND TYPES.
4. RADIUS AT CURB & GUTTER TO FACE OF CURB.

LEGEND

—×—	SAWING ASPHALT
CG-18D	CONCRETE CURB & GUTTER 18-INCH TYPE D
CG-30D	CONCRETE CURB & GUTTER 30-INCH TYPE D
SW-4	CONCRETE SIDEWALK 4-INCH
CD-6	CONCRETE DRIVEWAY 6-INCH
AD-3	ASPHALTIC DRIVEWAY 3-INCH
AP-4	ASPHALTIC SURFACE 4-INCH
GR-4	GRAVEL DRIVEWAY 4-INCH
BP-4	BRICK PAVERS

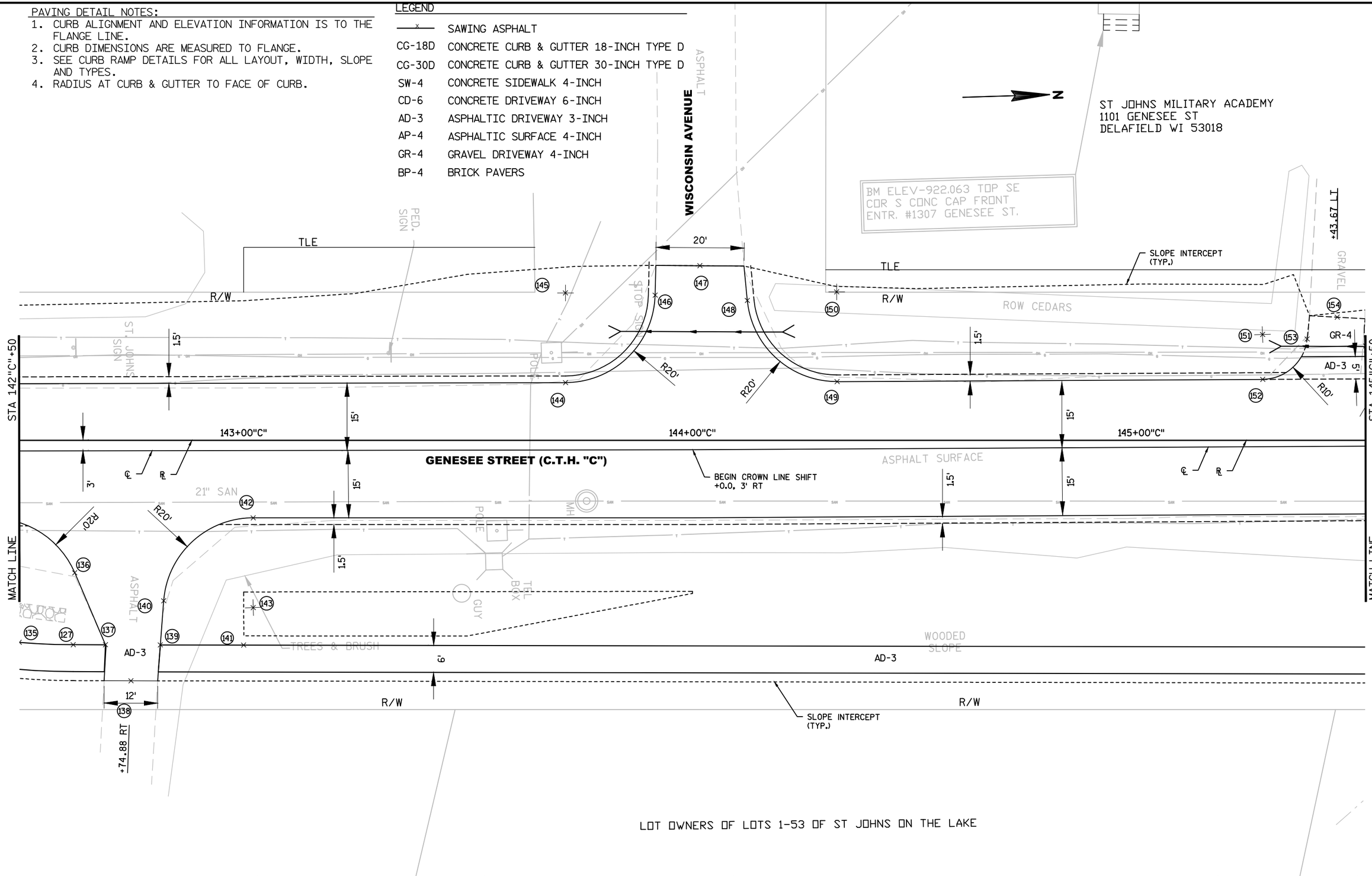

PROJECT NO:14-3775(11)	HWY:CTH "C"	COUNTY:WAUKESHA	PAVING DETAILS: 142+50.00 TO 145+50.00	SHEET 22	E

2

PAVING DETAIL NOTES:

1. CURB ALIGNMENT AND ELEVATION INFORMATION IS TO THE FLANGE LINE.
2. CURB DIMENSIONS ARE MEASURED TO FLANGE.
3. SEE CURB RAMP DETAILS FOR ALL LAYOUT, WIDTH, SLOPE AND TYPES.
4. RADIUS AT CURB & GUTTER TO FACE OF CURB.

LEGEND

—x—	SAWING ASPHALT
CG-18D	CONCRETE CURB & GUTTER 18-INCH TYPE D
CG-30D	CONCRETE CURB & GUTTER 30-INCH TYPE D
SW-4	CONCRETE SIDEWALK 4-INCH
CD-6	CONCRETE DRIVEWAY 6-INCH
AD-3	ASPHALTIC DRIVEWAY 3-INCH
AP-4	ASPHALTIC SURFACE 4-INCH
GR-4	GRAVEL DRIVEWAY 4-INCH
BP-4	BRICK PAVERS

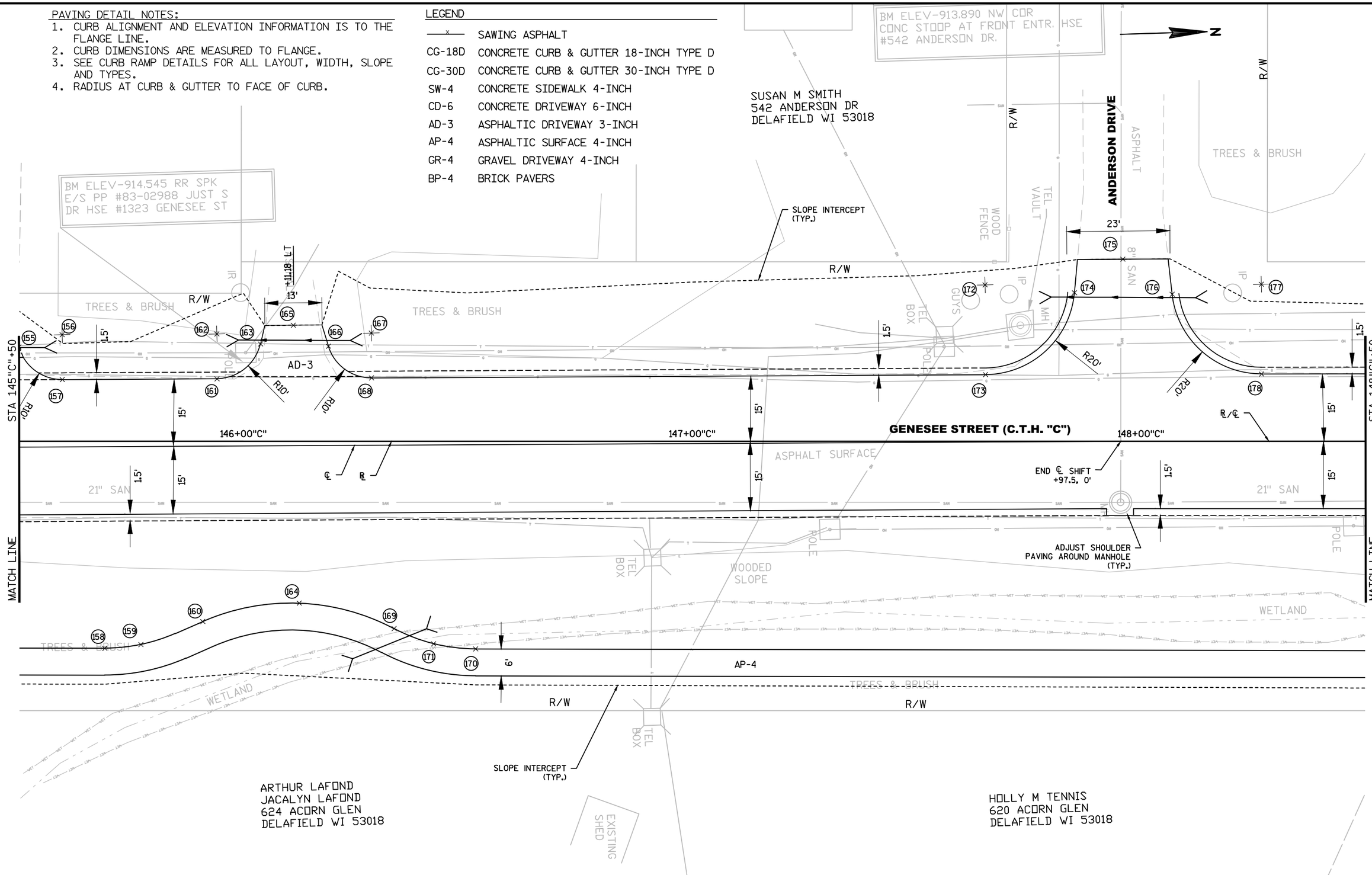

PROJECT NO:14-3775(11)	HWY:CTH "C"	COUNTY:WAUKESHA	PAVING DETAILS: 145+50.00 TO 148+50.00	SHEET 23	E

2

PAVING DETAIL NOTES:

1. CURB ALIGNMENT AND ELEVATION INFORMATION IS TO THE FLANGE LINE.
2. CURB DIMENSIONS ARE MEASURED TO FLANGE.
3. SEE CURB RAMP DETAILS FOR ALL LAYOUT, WIDTH, SLOPE AND TYPES.
4. RADIUS AT CURB & GUTTER TO FACE OF CURB.

LEGEND

—x—	SAWING ASPHALT
CG-18D	CONCRETE CURB & GUTTER 18-INCH TYPE D
CG-30D	CONCRETE CURB & GUTTER 30-INCH TYPE D
SW-4	CONCRETE SIDEWALK 4-INCH
CD-6	CONCRETE DRIVEWAY 6-INCH
AD-3	ASPHALTIC DRIVEWAY 3-INCH
AP-4	ASPHALTIC SURFACE 4-INCH
GR-4	GRAVEL DRIVEWAY 4-INCH
BP-4	BRICK PAVERS

DAVID LEEF
1411 GENESEE ST
DELAFIELD WI 53018

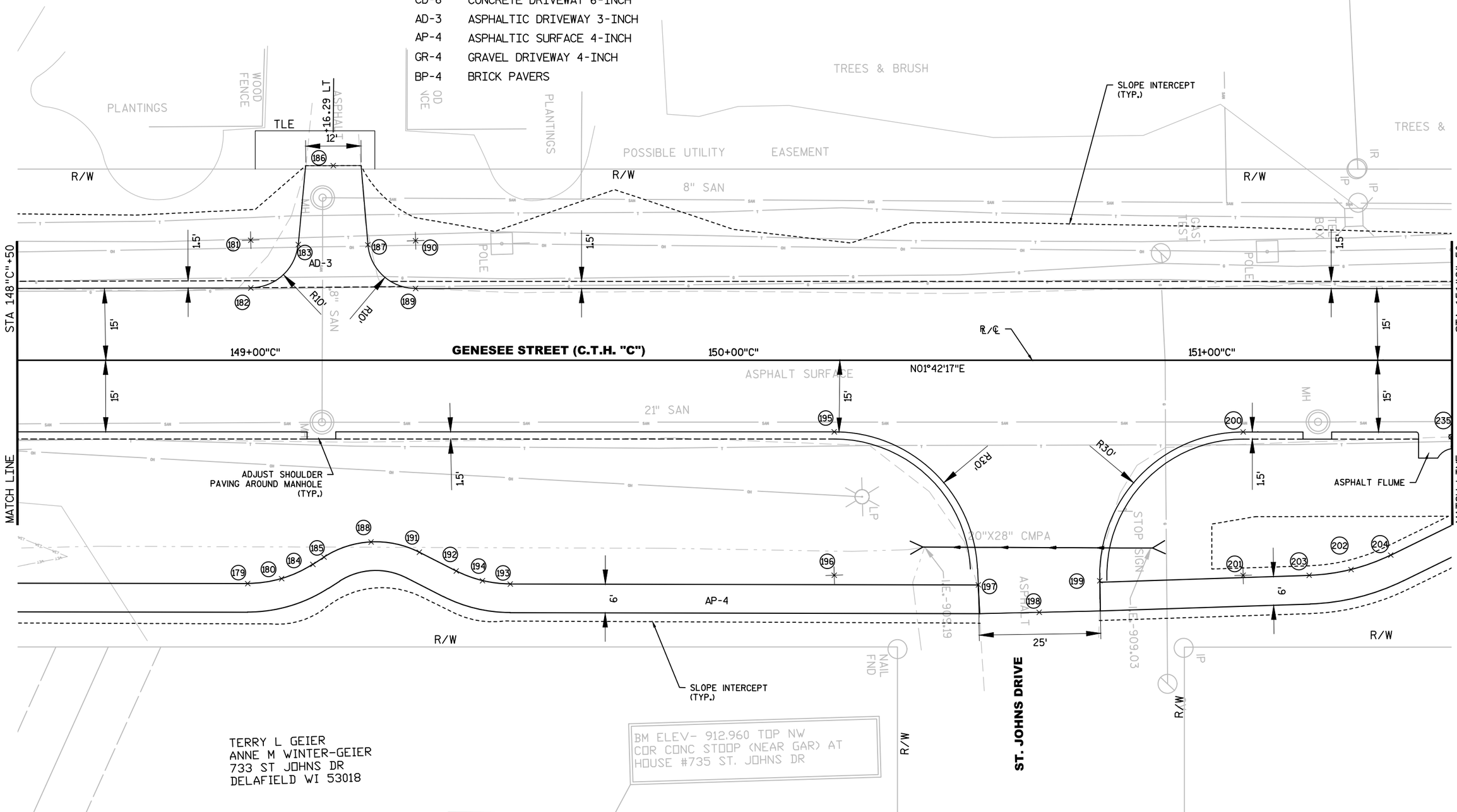

PROJECT NO:14-3775(11)	HWY:CTH "C"	COUNTY:WAUKESHA	PAVING DETAILS: 148+50.00 TO 151+50.00	SHEET 24	E

2

IAN & SHIRLEY SELTZER TRUST
GENESEE ST
AFIELD WI 53018

LAFORE TRUST
1441 GENESEE ST
DELAFIELD WI 53018

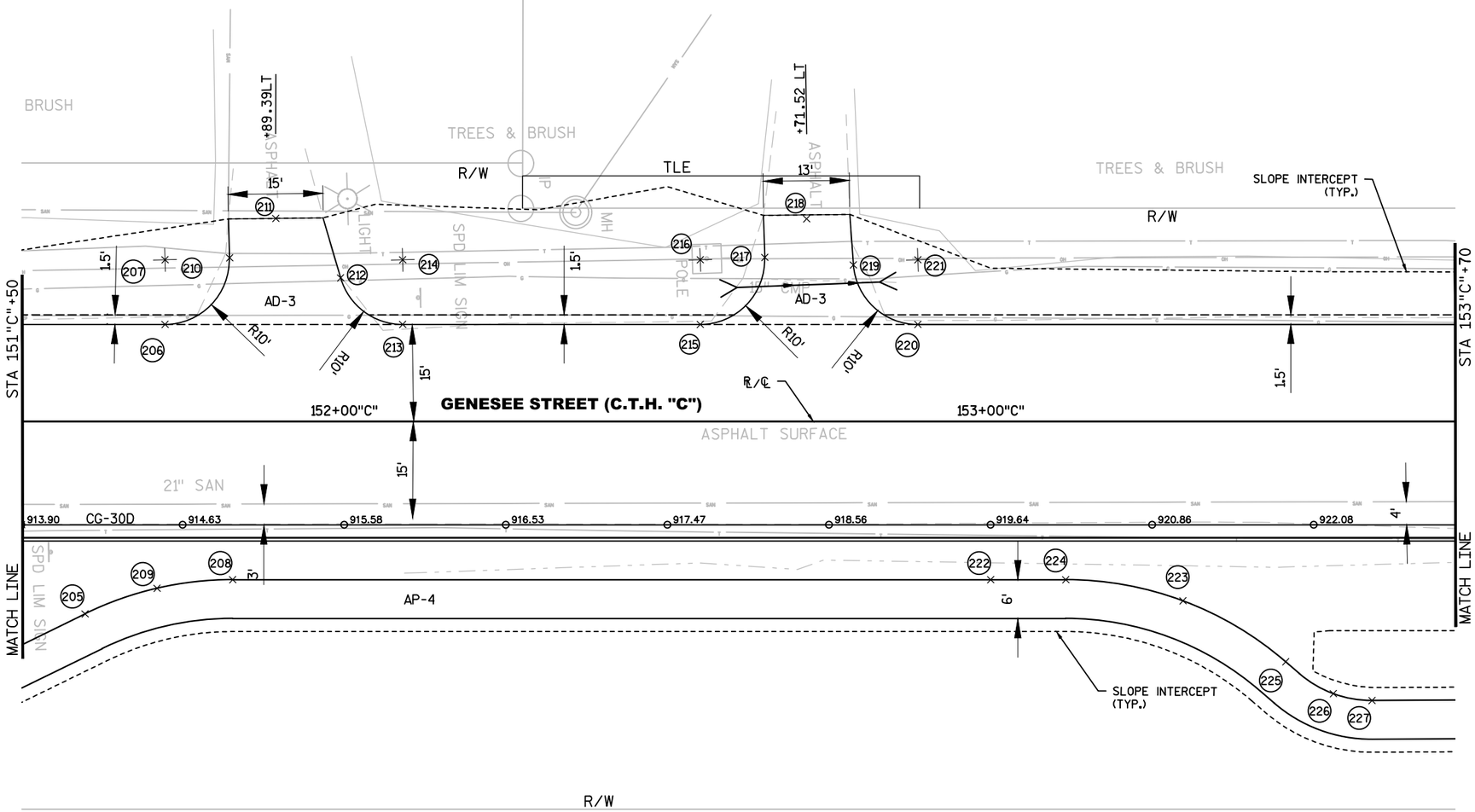

LEGEND

—x—	SAWING ASPHALT
CG-18D	CONCRETE CURB & GUTTER 18-INCH TYPE D
CG-30D	CONCRETE CURB & GUTTER 30-INCH TYPE D
SW-4	CONCRETE SIDEWALK 4-INCH
CD-6	CONCRETE DRIVEWAY 6-INCH
AD-3	ASPHALTIC DRIVEWAY 3-INCH
AP-4	ASPHALTIC SURFACE 4-INCH
GR-4	GRAVEL DRIVEWAY 4-INCH
BP-4	BRICK PAVERS

RICHARD L DAY
SALLY M DAY
623 ANTHONY CT
DELAFIELD WI 53018

PAVING DETAIL NOTES:

1. CURB ALIGNMENT AND ELEVATION INFORMATION IS TO THE FLANGE LINE.
2. CURB DIMENSIONS ARE MEASURED TO FLANGE.
3. SEE CURB RAMP DETAILS FOR ALL LAYOUT, WIDTH, SLOPE AND TYPES.
4. RADIUS AT CURB & GUTTER TO FACE OF CURB.

PROJECT NO:14-3775(11)	HWY:CTH "C"	COUNTY:WAUKESHA	PAVING DETAILS: 151+50.00 TO 153+70.00	SHEET 25	E

2

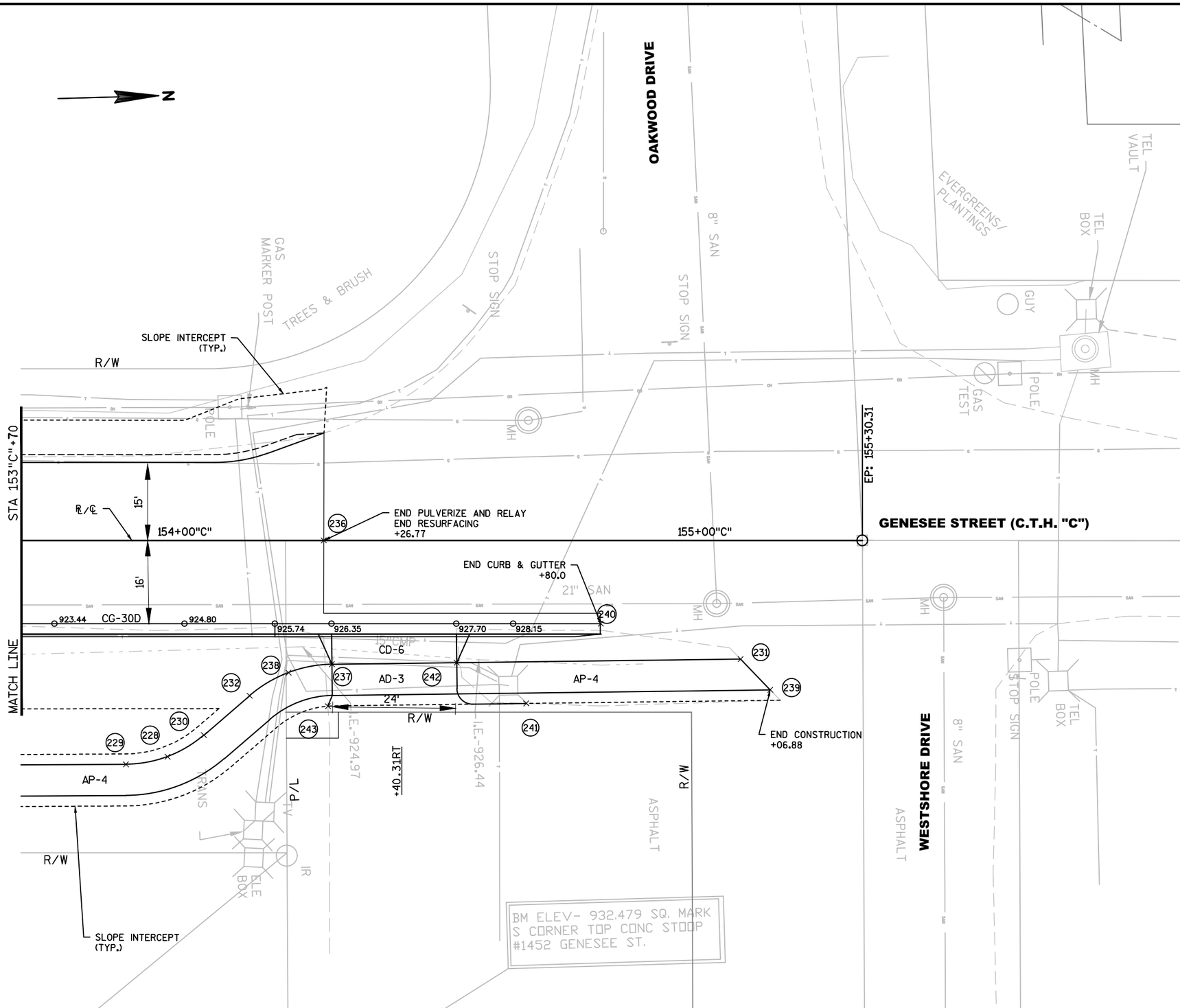

LEGEND

—x—	SAWING ASPHALT
CG-18D	CONCRETE CURB & GUTTER 18-INCH TYPE D
CG-30D	CONCRETE CURB & GUTTER 30-INCH TYPE D
SW-4	CONCRETE SIDEWALK 4-INCH
CD-6	CONCRETE DRIVEWAY 6-INCH
AD-3	ASPHALTIC DRIVEWAY 3-INCH
AP-4	ASPHALTIC SURFACE 4-INCH
GR-4	GRAVEL DRIVEWAY 4-INCH
BP-4	BRICK PAVERS

PAVING DETAIL NOTES:

1. CURB ALIGNMENT AND ELEVATION INFORMATION IS TO THE FLANGE LINE.
2. CURB DIMENSIONS ARE MEASURED TO FLANGE.
3. SEE CURB RAMP DETAILS FOR ALL LAYOUT, WIDTH, SLOPE AND TYPES.
4. RADIUS AT CURB & GUTTER TO FACE OF CURB.

PROJECT NO:14-3775(11)	HWY:CTH "C"	COUNTY:WAUKESHA	PAVING DETAILS: 153+70.00 TO 155+06.88	SHEET 26	E

2

Point Number	Description	Station	Offset	Northing	Easting
1	SAWCUT	130+53.89'	0.000'	179682.5532'	637119.7473'
2	PC FLANGE	130+54.37'	26.882'	179682.2288'	637146.6317'
3	R=25.0', FLANGE	130+54.67'	51.880'	179681.7803'	637171.6277'
4	FLANGE	130+53.66'	-13.000'	179682.7100'	637106.7463'
5	PT FLANGE	130+76.36'	39.455'	179703.8337'	637159.8528'
6	FLANGE	130+81.96'	50.617'	179709.0958'	637171.1771'
7	FLANGE	130+70.81'	-13.000'	179699.8522'	637107.2564'
8	FLANGE	130+87.77'	-9.000'	179716.6774'	637111.7589'
9	SAWCUT	130+98.09'	63.615'	179724.8367'	637184.6487'
10	PC FLANGE	131+01.06'	51.279'	179728.1722'	637172.4066'
11	BOC_DW	131+10.48'	-11.500'	179739.4514'	637109.9356'
12	DW	131+15.25'	-26.044'	179744.6591'	637095.5396'
13	MATCH	131+18.76'	-39.473'	179748.5649'	637082.2211'
14	R=20.0', FLANGE	131+19.27'	43.000'	179746.6164'	637164.6729'
15	PT FLANGE	131+19.27'	23.000'	179747.2114'	637144.6818'
16	R=13.0', FOW	131+21.54'	43.000'	179748.8924'	637164.7407'
17	DW	131+26.54'	-34.042'	179756.1770'	637087.8810'
18	BOC_DW	131+31.74'	-11.500'	179760.7110'	637110.5683'
19	FOW	131+71.18'	-20.000'	179800.3785'	637103.2450'
20	BOW	131+71.76'	-25.000'	179801.1089'	637098.2645'
21	BOC_DW	131+96.50'	25.500'	179824.3336'	637149.4781'
22	DW	132+01.73'	41.876'	179829.0740'	637166.0020'
23	FOW	132+02.96'	-12.500'	179831.9258'	637111.6872'
24	DW	132+17.70'	41.000'	179845.0690'	637165.6018'
25	BOC_DW	132+20.09'	25.500'	179847.9193'	637150.1800'
26	MATCH	132+25.44'	-88.462'	179856.6535'	637036.4275'
27	R=20.0', FOW R=28.0',BOW	132+32.72'	-30.686'	179862.2137'	637094.3950'
28	PT FOW	132+49.82'	-41.059'	179879.6143'	637084.5350'
29	PC FOW	132+52.72'	-30.686'	179882.2049'	637094.9899'
30	BOW	132+56.66'	-45.208'	179886.5745'	637080.5910'
31	PT BOW	132+56.66'	-45.208'	179886.5745'	637080.5910'
32	PC BOW	132+60.72'	-30.686'	179890.2013'	637095.2279'
33	BOC_DW	132+64.26'	-11.500'	179893.1684'	637114.5103'
34	FOW	132+68.91'	38.436'	179896.3300'	637164.5622'
35	PC DW	132+69.26'	-93.231'	179900.5975'	637032.9638'
36	FOW	132+71.33'	71.132'	179897.7784'	637197.3162'
37	FLANGE	132+71.44'	23.000'	179899.3185'	637149.2086'
38	PT DW	132+72.53'	-106.840'	179904.2651'	637019.4582'
39	DW_SAW CUT	132+74.38'	-110.485'	179906.2280'	637015.8700'
40	MATCH	132+76.34'	81.046'	179902.4884'	637207.3750'
41	BOW	132+76.86'	37.460'	179904.3033'	637163.8229'
42	BOW	132+79.27'	70.549'	179905.7327'	637196.9695'
43	FOW	132+85.53'	-16.000'	179914.5626'	637110.6450'
44	FLANGE	132+85.75'	-9.000'	179914.5694'	637117.6483'
45	PC DW	132+87.26'	-77.530'	179918.1225'	637049.1934'
46	BOC_DW	132+92.37'	-11.913'	179921.2810'	637114.9342'
47	PT DW	132+92.73'	-86.879'	179923.8641'	637040.0118'
48	R=10.0',DW	132+97.26'	-77.530'	179928.1181'	637049.4908'
49	R=30.0',DW	132+99.26'	-93.231'	179930.5842'	637033.8562'
50	FLANGE	133+23.06'	28.000'	179950.7712'	637155.7420'
51	PC FOW	133+99.29'	-23.000'	180028.4765'	637107.0324'
52	FLANGE	133+99.51'	-16.000'	180028.4897'	637114.0355'
53	PC FLANGE	134+05.90'	-16.000'	180034.8762'	637114.2256'
54	R=43.0',FLANGE R=38.0', FOW	134+05.90'	-61.000'	180036.2148'	637069.2455'
55	PT FLANGE	134+50.86'	-59.081'	180081.0969'	637072.5008'

Point Number	Description	Station	Offset	Northing	Easting
56	FLANGE	134+51.68'	-69.040'	180082.2117'	637062.5706'
57	SAWCUT	134+63.02'	-68.812'	180093.5449'	637063.1363'
58	PC FLANGE	134+76.10'	-40.657'	180105.7761'	637091.6678'
59	R=5.0', FLANGE	134+84.54'	6.000'	180112.8308'	637138.5553'
60	PT FLANGE	134+84.54'	12.000'	180112.6522'	637144.5526'
61	PC FLANGE	134+84.54'	0.000'	180113.0093'	637132.5579'
62	FOW	134+89.18'	-30.698'	180118.5614'	637102.0119'
63	PT FLANGE	134+96.18'	-16.000'	180125.1172'	637116.9112'
64	BOW	134+94.02'	-35.698'	180123.5477'	637097.1581'
65	R=20.0',FLANGE	134+96.18'	-36.000'	180125.7122'	637096.9200'
66	EOP	135+47.25'	28.610'	180174.8367'	637163.0201'
67	FOW	134+99.65'	-23.000'	180128.7941'	637110.0175'
68	BOW	135+01.72'	-28.000'	180131.0130'	637105.0813'
69	FLANGE	135+40.11'	12.000'	180168.2000'	637146.2057'
70	FLANGE	135+40.44'	28.000'	180168.0509'	637162.2084'
71	PT FLANGE	135+76.64'	0.000'	180205.0712'	637135.2977'
72	R=5.0',FLANGE	135+75.66	6.014	180203.9056'	637141.2800'
73	FLANGE	135+76.89'	-15.999'	180205.7880'	637119.3130'
74	PC FLANGE	135+76.97'	11.966'	180205.0412'	637147.2681'
75	SAW CUT	135+81.64'	0.000'	180210.0671'	637135.4464'
76	PC FLANGE	137+15.13'	-12.581'	180343.8749'	637126.8418'
77	R=20.0', FLANGE	137+15.63'	-32.575'	180344.9638'	637106.8714'
78	BOW	137+19.40'	-32.563'	180348.7306'	637106.9955'
79	FOW	137+21.45'	-27.552'	180350.6348'	637112.0657'
80	PC EOP	137+23.43'	17.450'	180351.2696'	637157.1065'
81	R=10.0', EOP	137+24.08'	27.429'	180351.6230'	637167.1003'
82	PT EOP	137+34.07'	27.132'	180361.6230'	637167.1003'
83	PT FLANGE	137+35.63'	-32.508'	180364.9528'	637107.5340'
84	FLANGE	137+35.66'	-42.983'	180365.2998'	637097.0639'
85	SAWCUT	137+43.59'	44.712'	180370.6141'	637184.9560'
86	SAWCUT	137+50.00'	-52.988'	180379.9267'	637087.4901'
87	MID FOP	137+68.36'	46.331'	180395.3227'	637187.3112'
88	PC FOP	137+52.54'	48.996'	180379.4333'	637189.5041'
89	PC EOP	137+52.67'	37.960'	180379.8871'	637178.4772'
90	PC FLANGE	137+59.58'	-32.95	180388.9094	637107.8041
91	BOP	137+52.47'	54.999'	180379.1864'	637195.5032'
92	PT EOP	137+72.63'	18.188'	180400.4307'	637159.3075'
93	R=20.0', EOP	137+72.67'	38.188'	180399.8702'	637179.2997'
94	R=20.0',FLANGE	137+79.58'	-32.824'	180408.8964'	637108.5249'
95	PT FLANGE	137+79.58'	-12.824'	180408.3014	637128.5160'
96	PT, PC FOP	137+82.83'	39.422'	180409.9979'	637180.8363'
97	PT FOP	138+10.34'	31.123'	180437.7341'	637173.3584'
98	MID FOP	137+95.98'	33.255'	180423.3174'	637175.0625'
99	FOP	138+50.00'	31.054'	180477.3824'	637174.4699'
100	FOP	139+00.00'	30.968'	180527.3628'	637175.8711'
101	FOP	139+50.00'	30.882'	180577.3433'	637177.2722'
102	FOP	140+00.00'	30.796'	180627.3237'	637178.6734'
103	PC FOP	140+02.56'	30.791'	180629.8854'	637178.7452'
104	MID FOP	140+14.87'	32.308'	180642.1425'	637180.6272'
105	PT, PC FOP	140+26.43'	36.807'	180653.5594'	637185.4677'
106	R=31.0',FLANGE	140+33.58'	-44.262'	180663.1261'	637104.6476'
107	PC FLANGE	140+33.59'	-13.262'	180662.2059	637135.6340'
108	R=30.0',EOP	140+33.84'	47.737'	180660.6478'	637196.6143'
109	PC EOP	140+33.79'	17.737'	180661.4885'	637166.6261'
110	MID FOP	140+31.03'	38.602'	180658.1096'	637187.3993'
111	PT FOP	140+35.94'	39.213'	180662.9945'	637188.1558'
112	PT EOP; FOP	140+62.61'	39.213'	180689.6596'	637188.9493'

Point Number	Description	Station	Offset	Northing	Easting
113	PT FLANGE	140+64.83'	-47.038'	180694.4421'	637102.8030'
114	SAWCUT	140+75.58'	-47.068'	180705.1843'	637103.0929'
115	SAWCUT	140+77.06'	56.336'	180703.5917'	637206.4949'
116	PC EOP	140+88.50'	-30.987'	180717.6252'	637119.5505'
117	PC EOP; FOP	140+94.49'	36.179'	180721.6121'	637186.8650'
118	PC FOP	141+02.60'	35.919'	180729.7249'	637186.8469'
119	MID FOP	141+09.10'	36.472'	180736.2069'	637187.5927'
120	PT FOP	142+06.13'	41.151'	180833.0531'	637195.1556'
121	R=20.0',EOP	141+08.45'	-32.392'	180737.6088'	637118.7404'
122	PT EOP	141+08.49'	-12.392'	180737.0483'	637138.7325'
123	PT FOP	141+15.30'	38.514'	180742.3403'	637189.8184'
124	PT EOP	141+22.19'	17.585'	180749.8483'	637169.1031'
125	R=30.0',EOP	141+22.24'	47.585'	180749.0076'	637199.0914'
126	PC EOP	141+22.57'	41.896'	180749.5113'	637193.4150'
127	FOP	142+62.02'	45.553'	180888.7853'	637201.2184'
128	MID FOP	141+40.76'	45.807'	180767.5796'	637197.8654'
129	PT,PC FOP	141+58.86'	41.474'	180785.7973'	637194.0727'
130	MID FOP	141+77.31'	36.537'	180804.3841'	637189.6869'
131	PT, PC FOP	141+96.24'	39.057'	180823.2310'	637192.7689'
132	MID FOP	142+01.12'	40.402'	180828.0700'	637194.2588'
133	PC EOP	142+43.93'	17.375'	180871.5462'	637172.5148'
134	R=20.0',EOP	142+43.97'	37.375'	180870.9857'	637192.5070'
135	FOP	142+50.00'	45.021'	180876.7899'	637200.3297'
136	PT EOP	142+62.36'	29.518'	180889.6035'	637185.2011'
137	EOP/FOP	142+69.21'	45.566'	180895.9721'	637201.4455'
138	BUTT JOINT	142+74.88'	53.576'	180901.4013'	637209.6210'
139	EOP/FOP	142+81.43'	45.588'	180908.1938'	637201.8316'
140	PC EOP	142+82.18'	35.752'	180909.2355'	637192.0223'
141	FOP	143+00.00'	45.623'	180926.7499'	637202.4179'
142	PT EOP	143+02.13'	17.273'	180929.7185'	637174.1437'
143	R=20.0',EOP	143+02.13'	37.273'	180929.1236'	637194.1349'
144	PC EOP	143+71.73'	-12.846'	181000.1843'	637146.1093'
145	R=20.0',EOP	143+71.69'	-32.846'	181000.7448'	637126.1171'
146	PT EOP	143+91.69'	-32.345'	181020.7148'	637127.2118'
147	SAWCUT	144+01.67'	-38.905'	181030.8906'	637120.9521'
148	PC EOP	144+12.22'	-31.164'	181041.2070'	637129.0032'
149	PT EOP	144+32.24'	-13.066'	181060.6757'	637147.6891'
150	R=20.0',EOP	144+32.13'	-33.066'	181061.1642'	637127.6950'
151	R=10.0',EOP	145+27.01'	-23.571'	181155.7215'	637140.0083'
152	PC EOP	145+27.07'	-13.571'	181155.4772'	637150.0053'
153	PT EOP	145+36.96'	-22.575'	181165.6378'	637141.2997'
154	MATCH	145+43.67'	-27.441'	181172.4889'	637136.6355'
155	PC EOP	145+50.00'	-21.030'	181178.6220'	637143.2317'
156	R=10.0',EOP	145+59.62'	-23.744'	181188.3230'	637140.8048'
157	PT EOP	145+59.68'	-13.745'	181188.0763'	637150.8017'
158	PC FOP	145+69.15'	46.116'	181195.7644'	637210.9178'
159	MID FOP	145+77.19'	45.294'	181203.8222'	637210.3352'
160	PT,PC FOP	145+90.98'	40.159'	181217.7653'	637205.6125'
161	PC EOP	145+94.14'	-13.920'	181222.5335'	637151.6519'
162	R=10.0' EOP	145+94.09'	-23.920'	181222.7802'	637141.6549'
163	PT EOP	146+03.84'	-21.693'	181232.4587'	637144.1702'
164	MID FOP	146+12.47'	36.068'	181239.3622'	637202.1628'
165	BUTT JOINT	146+11.14'	-25.859'	181239.8815'	637140.2241'
166	PC EOP	146+18.97'	-21.176'	181247.5664'	637145.1371'
167	R=10.0',EOP	146+28.53'	-24.111'	181257.2091'	637142.4879'
168	PT EOP	146+28.58'	-14.111'	181256.9649'	637152.4849'
169	PT,PC FOP	146+33.59'	41.733'	181260.3088'	637208.4532'

2

2

Point Number	Description	Station	Offset	Northing	Easting
170	PT FOP	146+51.77'	46.268'	181278.3473'	637213.5271'
171	MID FOP	146+42.41'	45.108'	181269.0188'	637212.0896'
172	R=20.0',EOP	147+65.28'	-34.839'	181394.2128'	637135.8322'
173	PC EOP	147+65.38'	-14.840'	181393.7243'	637155.8262'
174	PT EOP	147+85.20'	-33.066'	181414.0725'	637138.1972'
175	BUTT JOINT	147+95.96'	-40.564'	181425.0575'	637131.0228'
176	PC EOP	148+06.96'	-32.742'	181435.8201'	637139.1689'
177	R=20.0',EOP	148+26.84'	-34.992'	181455.7513'	637137.5114'
178	PT EOP	148+26.87'	-14.992'	181455.1908'	637157.5035'
179	PC FOP	148+98.40'	46.720'	181524.8566'	637221.3159'
180	MID FOP	149+05.50'	45.704'	181531.9839'	637220.5116'
181	R=10.0',EOP	148+99.03'	-25.116'	181527.6208'	637149.5301'
182	PC EOP	148+99.05'	-15.116'	181527.3406'	637159.5262'
183	PT EOP	149+08.99'	-24.199'	181537.5469'	637150.7432'
184	PT EOP	149+12.02'	42.714'	181538.5896'	637217.7168'
185	PC EOP	149+14.36'	41.202'	181540.9718'	637216.2752'
186	BUTT JOINT	149+16.29'	-40.697'	181545.3351'	637134.4701'
187	PC EOP	149+23.54'	-24.140'	181552.0895'	637151.2346'
188	MID FOP	149+24.19'	38.024'	181550.8938'	637213.3906'
189	PT EOP	149+33.50'	-15.000'	181561.7762'	637160.6672'
190	R=10.0',EOP	149+33.50'	-25.000'	181562.0737'	637150.6717'
191	PT EOP	149+34.30'	40.177'	181560.9314'	637215.8432'
192	PC FOP	149+41.99'	44.097'	181568.5059'	637219.9903'
193	PT FOP	149+53.30'	46.821'	181579.7224'	637223.0494'
194	MID FOP	149+47.49'	46.125'	181573.9339'	637222.1810'
195	PC EOP	150+21.04'	14.981'	181648.3814'	637193.2391'
196	R=30.0',EOP	150+21.04'	44.981'	181647.4915'	637223.2259'
197	PT EOP, FOP	150+51.17'	47.000'	181677.5425'	637226.1402'
198	SAW CUT	150+63.92'	52.730'	181690.1165'	637232.2464'
199	PC EOP, FOP	150+76.57'	46.139'	181702.9597'	637226.0349'
200	PT EOP	151+06.55'	15.000'	181733.8511'	637195.8014'
201	R=30.0',EOP	151+06.55'	45.000'	181732.9587'	637225.7882'
202	MID FOP	151+29.11'	43.792'	181755.5448'	637225.2517'
203	PC FOP	151+20.35'	45.010'	181746.7580'	637226.2090'
204	PT FOP	151+37.41'	40.768'	181763.9366'	637222.4766'
205	PC FOP	151+59.90'	29.780'	181786.7408'	637212.1618'
206	PC EOP	151+72.26'	-15.000'	181800.4251'	637167.7695'
207	R=10.0',EOP	151+72.26'	-25.000'	181800.7226'	637157.7740'
208	PT FOP	151+82.73'	24.500'	181809.7181'	637207.5635'
209	MID FOP	151+71.01'	25.837'	181797.9670'	637208.5515'
210	PT EOP	151+82.25'	-25.297'	181810.7226'	637157.7740'
211	BUTT JOINT	151+89.40'	-31.409'	181818.0448'	637151.8776'
212	PC EOP	151+99.44'	-22.197'	181827.8045'	637161.3842'
213	PT EOP	152+09.03'	-15.000'	181837.1853'	637168.8635'
214	R=10.0',EOP	152+09.03'	-25.000'	181837.4828'	637158.8680'
215	PC EOP	152+55.07'	-15.000'	181883.2016'	637170.2330'
216	R=10.0',EOP	152+55.07'	-25.000'	181883.4991'	637160.2374'
217	PT EOP	152+65.06'	-25.364'	181893.4989'	637160.1709'
218	BUTT JOINT	152+71.52'	-31.334'	181900.1326'	637154.3952'
219	PC EOP	152+78.76'	-24.214'	181907.1585'	637161.7279'
220	PT EOP	152+88.73'	-15.000'	181916.8491'	637171.2344'
221	R=10.0',EOP	152+88.73'	-25.000'	181917.1465'	637161.2388'
222	FOP	153+00.00'	24.500'	181926.9357'	637211.0520'
223	MID FOP	153+29.76'	27.773'	181956.5852'	637215.2093'
224	PC FOP	153+11.60'	24.500'	181938.5321'	637211.3971'
225	PT,PC FOP	153+45.63'	37.182'	181972.1705'	637225.0858'
226	MID FOP	153+53.01'	42.132'	181979.3978'	637230.2531'

Point Number	Description	Station	Offset	Northing	Easting
227	PT FOP	153+58.99'	43.187'	181985.3466'	637231.4854'
228	MID FOP	153+96.71'	41.567'	182023.0986'	637230.9880'
229	PC FOP	153+88.72'	43.034'	182015.0638'	637232.2170'
230	PT FOP	154+03.71'	37.427'	182030.2139'	637227.0583'
231	FOP	155+06.88'	22.800'	182133.7770'	637215.5071'
232	PC FOP	154+12.51'	29.847'	182039.2409'	637219.7435'
233	PC FLANGE	154+16.10'	-15.000'	182044.1631'	637175.0233'
234	R=50.0',FLANGE	154+16.10'	-65.000'	182045.6504'	637125.0454'
235	FLANGE	151+50.05'	16.000'	181777.3092'	637198.0952'
236	SAWCUT	154+26.74'	0.000'	182054.3519'	637190.3332'
237	PT FOP	154+28.51'	23.796'	182055.4064'	637214.1707'
238	MID FOP	154+19.98'	25.411'	182046.8324'	637215.5321'
239	MATCH	155+12.59'	-28.728'	182139.3075'	637221.6023'
240	FLANGE	154+79.98'	16.000'	182107.0938'	637207.9099'
241	MATCH DW	154+65.66'	31.324'	182092.3232'	637222.8014'
242	FOP	154+52.31'	23.493'	182079.2107'	637214.5766'
243	MATCH DW	154+27.53'	31.843'	182054.1871'	637222.1856'

2

SW & SE RAMPS
CTH C & MILL STREET

CURB RAMP DETAIL
1"=10'

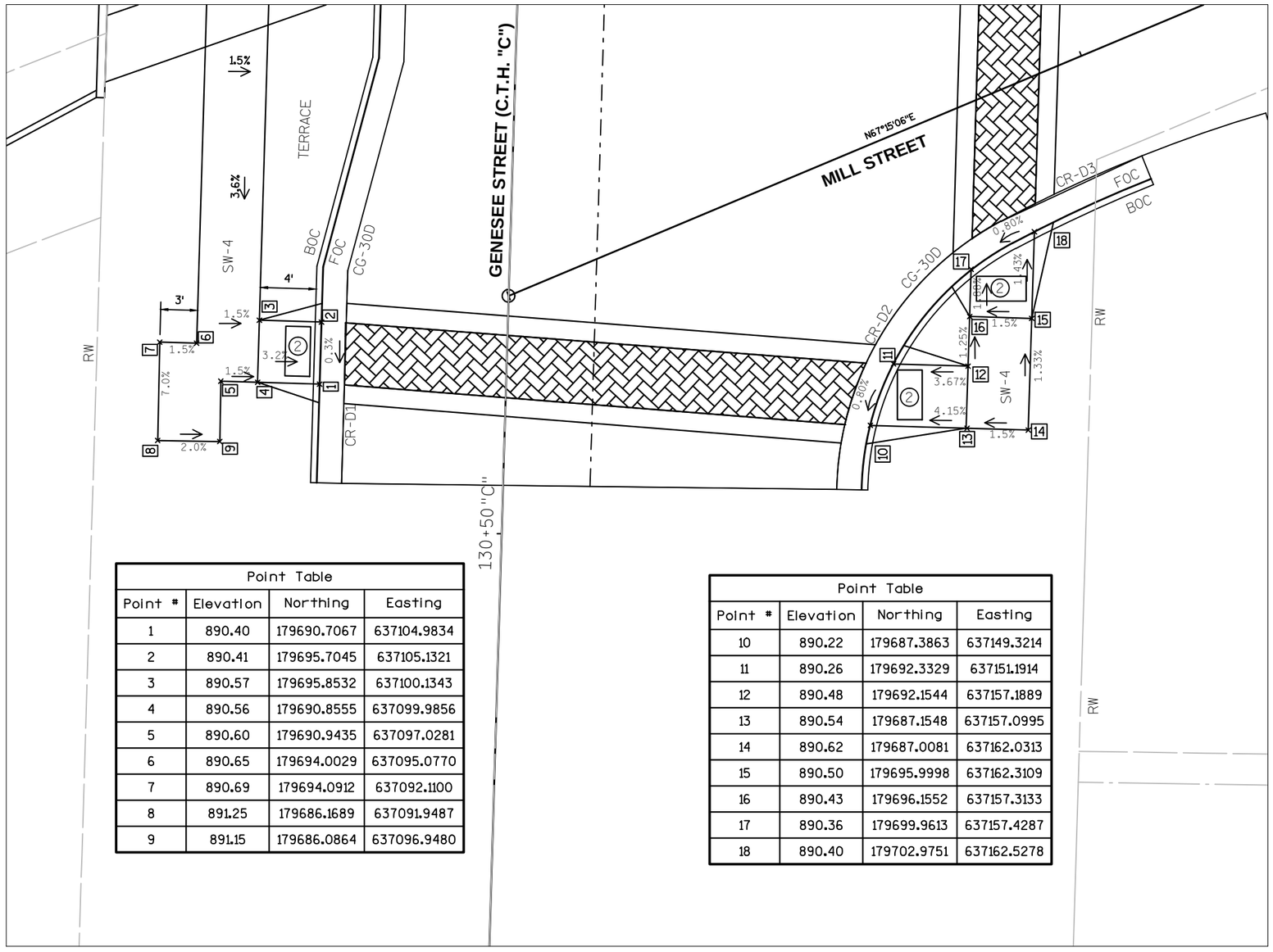

Point Table			
Point #	Elevation	Northing	Easting
1	890.40	179690.7067	637104.9834
2	890.41	179695.7045	637105.1321
3	890.57	179695.8532	637100.1343
4	890.56	179690.8555	637099.9856
5	890.60	179690.9435	637097.0281
6	890.65	179694.0029	637095.0770
7	890.69	179694.0912	637092.1100
8	891.25	179686.1689	637091.9487
9	891.15	179686.0864	637096.9480

Point Table			
Point #	Elevation	Northing	Easting
10	890.22	179687.3863	637149.3214
11	890.26	179692.3329	637151.1914
12	890.48	179692.1544	637157.1889
13	890.54	179687.1548	637157.0995
14	890.62	179687.0081	637162.0313
15	890.50	179695.9998	637162.3109
16	890.43	179696.1552	637157.3133
17	890.36	179699.9613	637157.4287
18	890.40	179702.9751	637162.5278

LEGEND

CG-30D	CONCRETE CURB & GUTTER 30-INCH TYPE D
SW-4	CONCRETE SIDEWALK 4-INCH
CR-#	CURB RAMP NUMBER
LL	LEVEL LANDING
BOC	BACK OF CURB
FOC	FACE OF CURB
(2)	GRADE CHANGE SHALL NOT EXCEED 11%

NOTE: ADDITIONAL LAYOUT POINTS LOCATED ON PAVING DETAIL SHEETS.

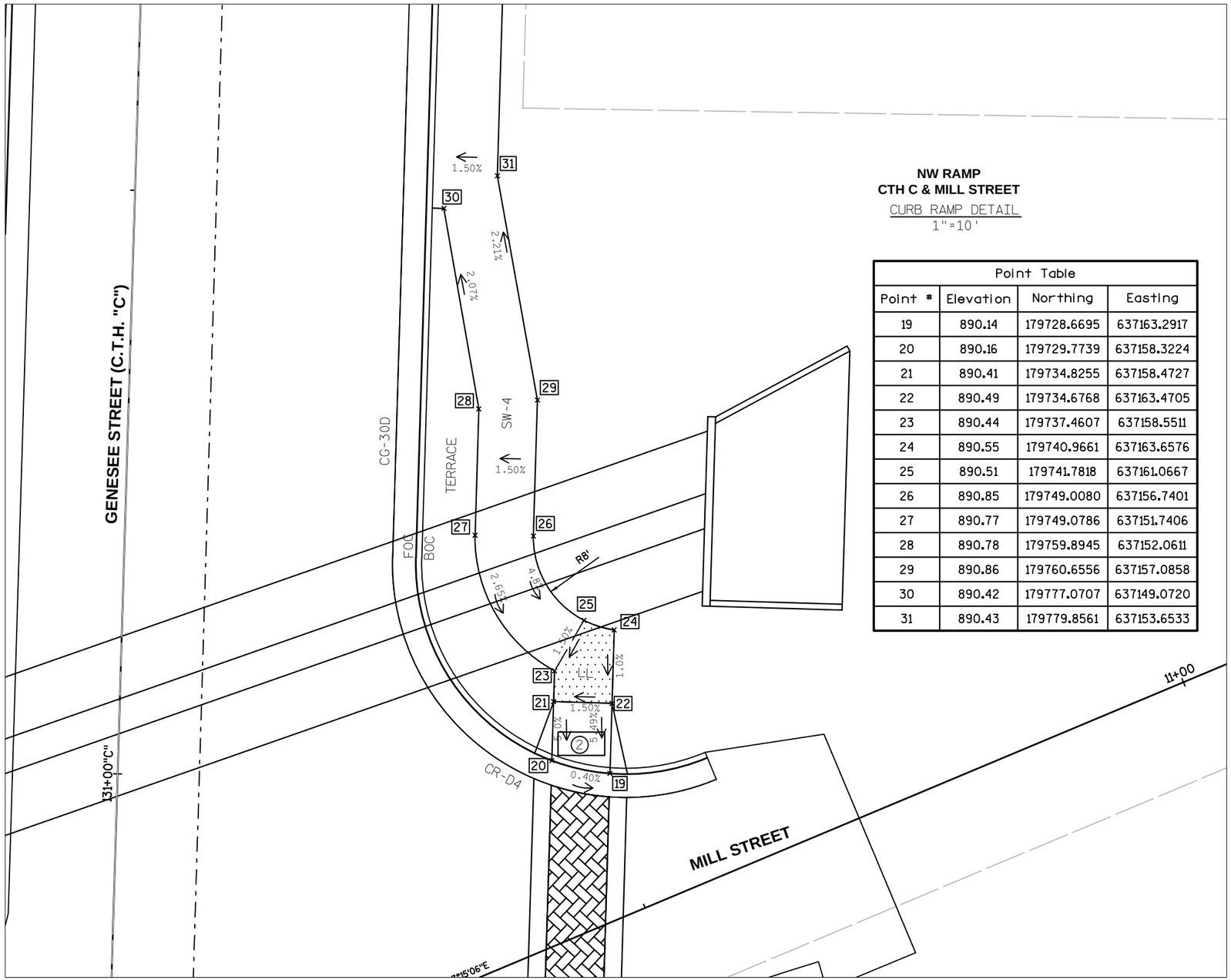

NW RAMP
CTH C & MILL STREET

CURB RAMP DETAIL
1"=10'

Point Table			
Point #	Elevation	Northing	Easting
19	890.14	179728.6695	637163.2917
20	890.16	179729.7739	637158.3224
21	890.41	179734.8255	637158.4727
22	890.49	179734.6768	637163.4705
23	890.44	179737.4607	637158.5511
24	890.55	179740.9661	637163.6576
25	890.51	179741.7818	637161.0667
26	890.85	179749.0080	637156.7401
27	890.77	179749.0786	637151.7406
28	890.78	179759.8945	637152.0611
29	890.86	179760.6556	637157.0858
30	890.42	179777.0707	637149.0720
31	890.43	179779.8561	637153.6533

N

LEGEND

CG-30D	CONCRETE CURB & GUTTER 30-INCH TYPE D
SW-4	CONCRETE SIDEWALK 4-INCH
CR-#	CURB RAMP NUMBER
	LEVEL LANDING
BOC	BACK OF CURB
FOC	FACE OF CURB
2	GRADE CHANGE SHALL NOT EXCEED 11%

NOTE: ADDITIONAL LAYOUT POINTS LOCATED ON PAVING DETAIL SHEETS.

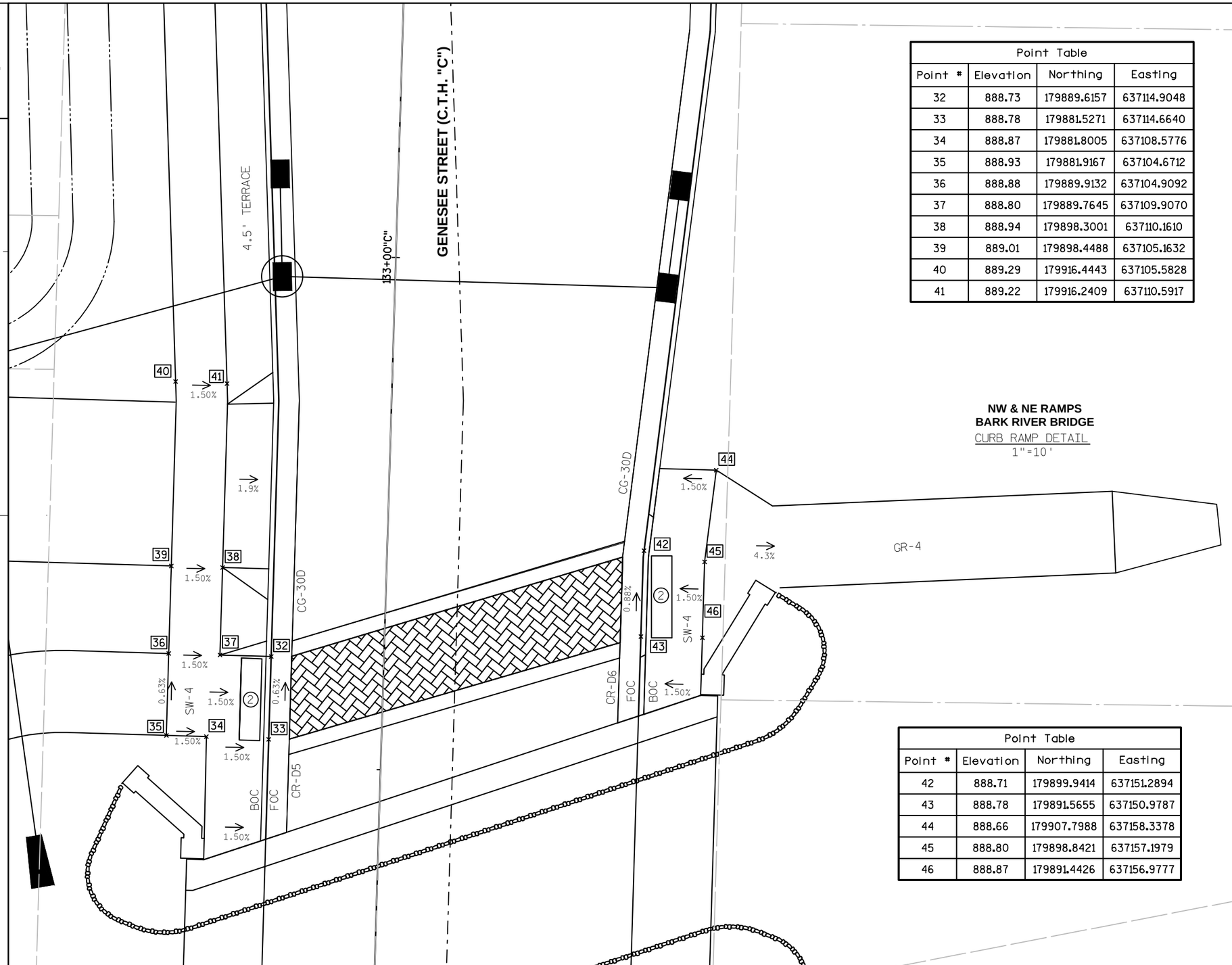

NW & NE RAMPS
BARK RIVER BRIDGE
CURB RAMP DETAIL
1"=10'

Point Table			
Point #	Elevation	Northing	Easting
32	888.73	179889.6157	637114.9048
33	888.78	179881.5271	637114.6640
34	888.87	179881.8005	637108.5776
35	888.93	179881.9167	637104.6712
36	888.88	179889.9132	637104.9092
37	888.80	179889.7645	637109.9070
38	888.94	179898.3001	637110.1610
39	889.01	179898.4488	637105.1632
40	889.29	179916.4443	637105.5828
41	889.22	179916.2409	637110.5917

Point Table			
Point #	Elevation	Northing	Easting
42	888.71	179899.9414	637151.2894
43	888.78	179891.5655	637150.9787
44	888.66	179907.7988	637158.3378
45	888.80	179898.8421	637157.1979
46	888.87	179891.4426	637156.9777

N

LEGEND

CG-30D	CONCRETE CURB & GUTTER 30-INCH TYPE D
SW-4	CONCRETE SIDEWALK 4-INCH
CR-#	CURB RAMP NUMBER
LL	LEVEL LANDING
BOC	BACK OF CURB
FOC	FACE OF CURB
(2)	GRADE CHANGE SHALL NOT EXCEED 11%

NOTE: ADDITIONAL LAYOUT POINTS LOCATED ON PAVING DETAIL SHEETS.

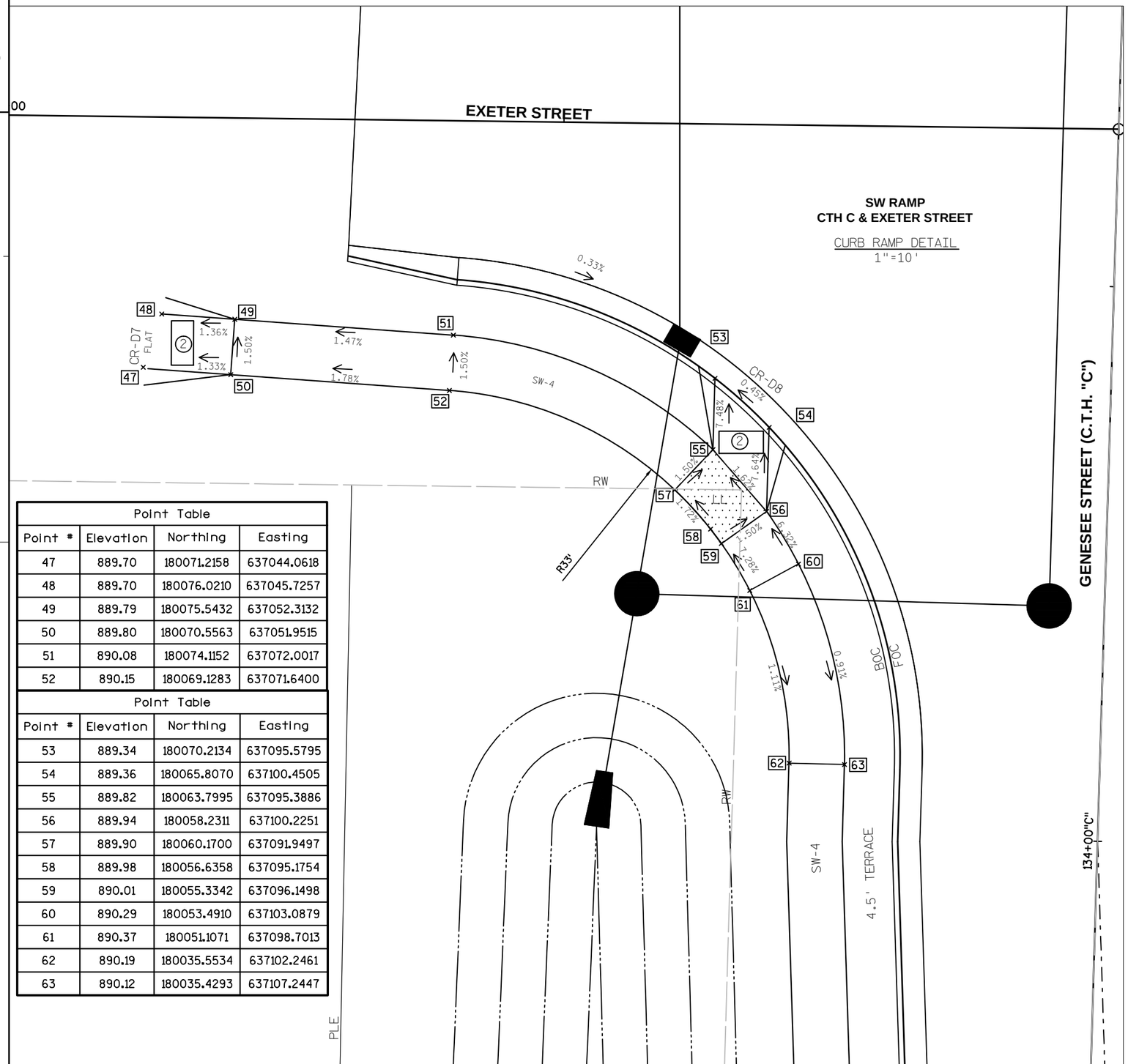

Point Table			
Point #	Elevation	Northing	Easting
47	889.70	180071.2158	637044.0618
48	889.70	180076.0210	637045.7257
49	889.79	180075.5432	637052.3132
50	889.80	180070.5563	637051.9515
51	890.08	180074.1152	637072.0017
52	890.15	180069.1283	637071.6400

Point Table			
Point #	Elevation	Northing	Easting
53	889.34	180070.2134	637095.5795
54	889.36	180065.8070	637100.4505
55	889.82	180063.7995	637095.3886
56	889.94	180058.2311	637100.2251
57	889.90	180060.1700	637091.9497
58	889.98	180056.6358	637095.1754
59	890.01	180055.3342	637096.1498
60	890.29	180053.4910	637103.0879
61	890.37	180051.1071	637098.7013
62	890.19	180035.5534	637102.2461
63	890.12	180035.4293	637107.2447

N

LEGEND

CG-30D	CONCRETE CURB & GUTTER 30-INCH TYPE D
SW-4	CONCRETE SIDEWALK 4-INCH
CR-#	CURB RAMP NUMBER
LL	LEVEL LANDING
BOC	BACK OF CURB
FOC	FACE OF CURB
2	GRADE CHANGE SHALL NOT EXCEED 11%

NOTE: ADDITIONAL LAYOUT POINTS LOCATED ON PAVING DETAIL SHEETS.

PROJECT NO: 14-3775(11)	HWY: CTH C	COUNTY: WAUKESHA	COUNTY: CURB RAMP DETAILS	SHEET ~~32~~	E

2

Point Table			
Point #	Elevation	Northing	Easting
64	890.20	180108.3607	637101.7083
65	889.75	180107.7136	637096.6955
66	890.16	180113.7123	637096.8654
67	890.21	180118.7101	637097.0141
68	890.11	180113.5636	637101.8632
69	890.16	180118.5614	637102.0119
70	892.28	180145.2807	637105.5059
71	892.20	180145.1320	637110.5037
72	892.33	180150.2785	637105.6547
73	892.25	180150.1298	637110.6525
74	893.68	180179.2226	637106.5161
75	893.61	180179.0827	637111.5141

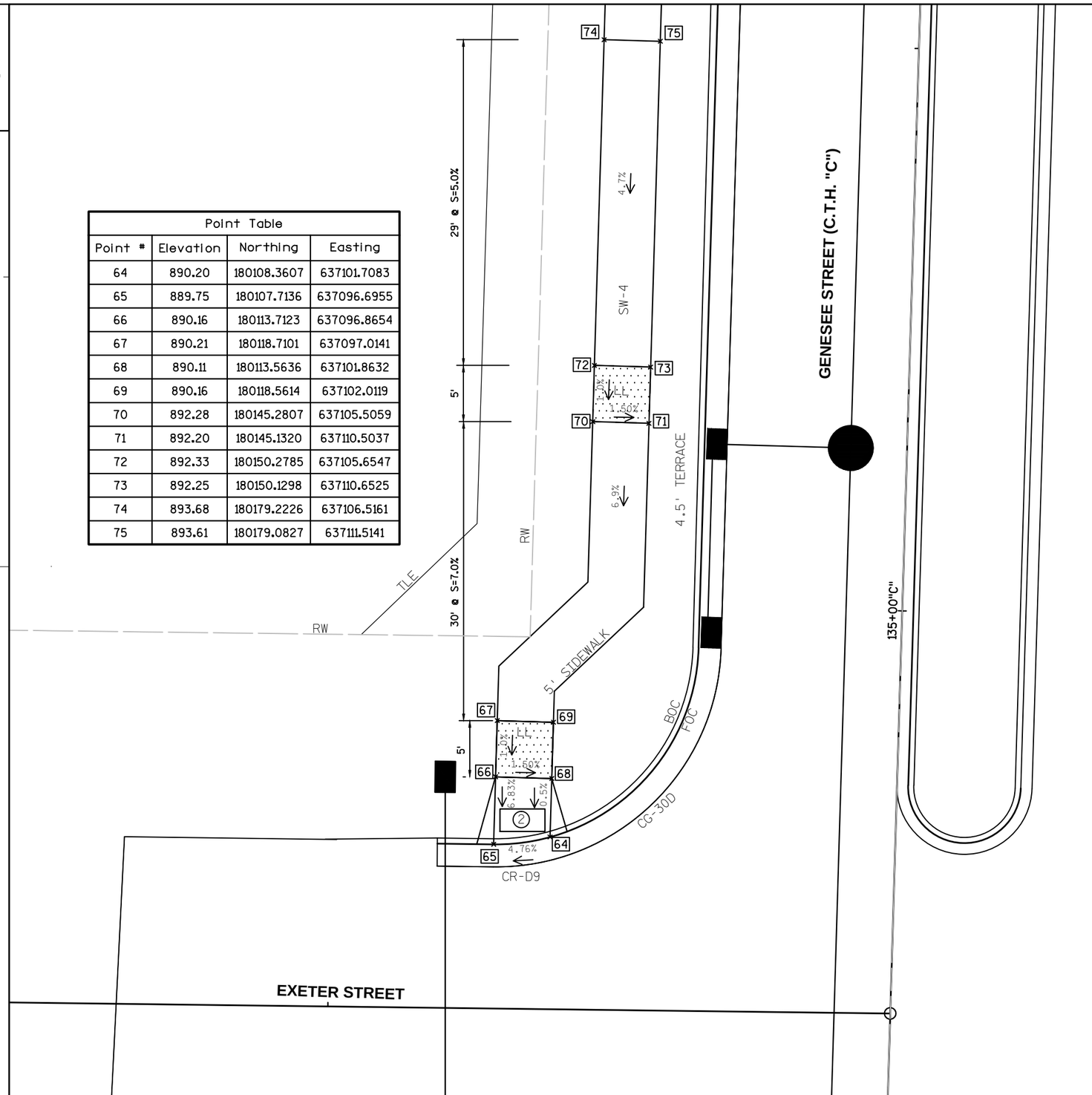

NE RAMP
CTH C & EXETER STREET

CURB RAMP DETAIL
1"=10'

N

LEGEND

CG-30D	CONCRETE CURB & GUTTER 30-INCH TYPE D
SW-4	CONCRETE SIDEWALK 4-INCH
CR-#	CURB RAMP NUMBER
LL	LEVEL LANDING
BOC	BACK OF CURB
FOC	FACE OF CURB
2	GRADE CHANGE SHALL NOT EXCEED 11%

NOTE: ADDITIONAL LAYOUT POINTS LOCATED ON PAVING DETAIL SHEETS.

2

PROJECT NO: 14-3775(11)	HWY: CTH C	COUNTY: WAUKESHA	COUNTY: CURB RAMP DETAILS	SHEET ~~33~~ --	E

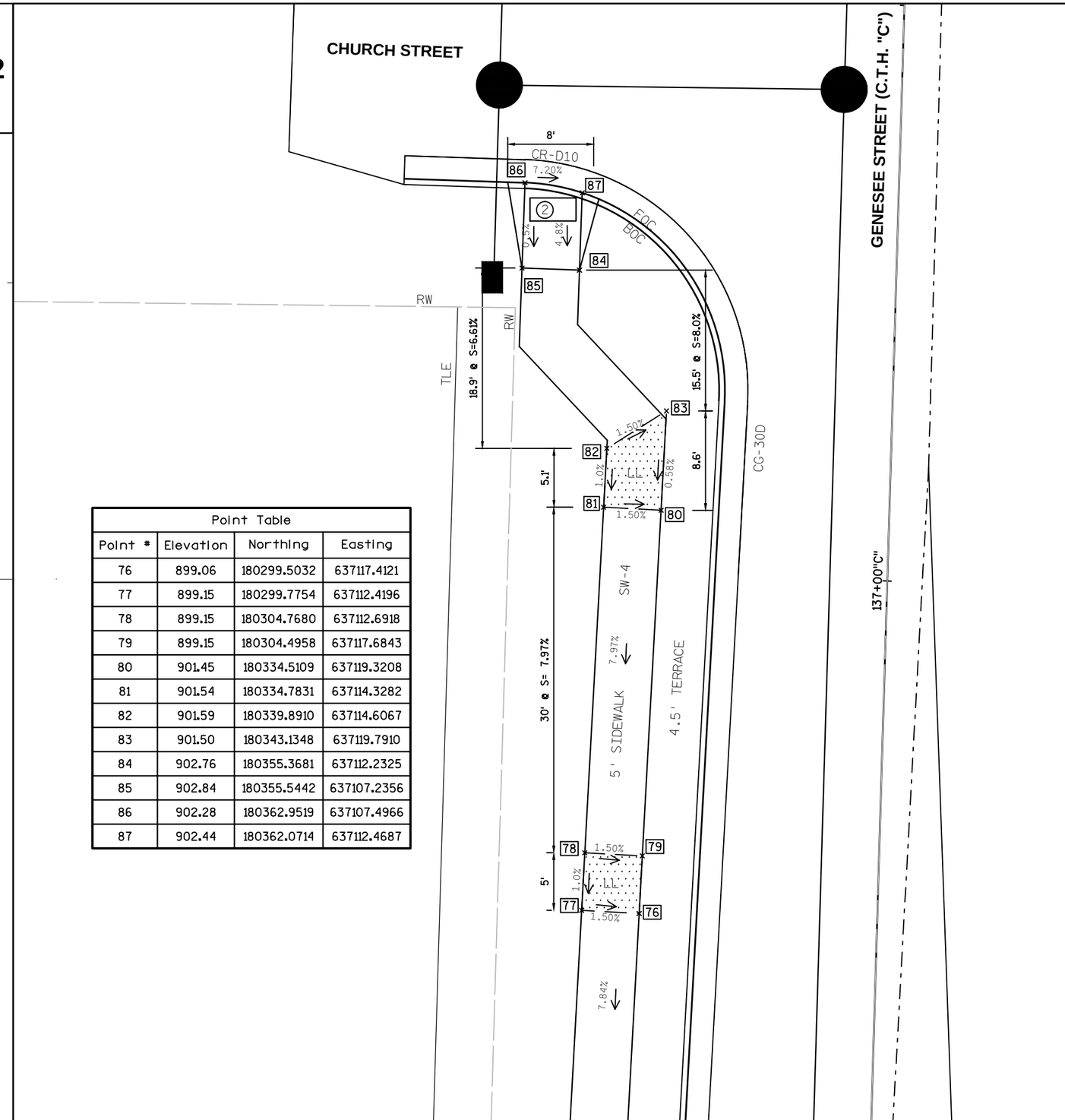

Point Table			
Point #	Elevation	Northing	Easting
76	899.06	180299.5032	637117.4121
77	899.15	180299.7754	637112.4196
78	899.15	180304.7680	637112.6918
79	899.15	180304.4958	637117.6843
80	901.45	180334.5109	637119.3208
81	901.54	180334.7831	637114.3282
82	901.59	180339.8910	637114.6067
83	901.50	180343.1348	637119.7910
84	902.76	180355.3681	637112.2325
85	902.84	180355.5442	637107.2356
86	902.28	180362.9519	637107.4966
87	902.44	180362.0714	637112.4687

SW RAMP
CTH C & CHURCH STREET

CURB RAMP DETAIL
1"=10'

N

LEGEND

CG-30D	CONCRETE CURB & GUTTER 30-INCH TYPE D
SW-4	CONCRETE SIDEWALK 4-INCH
CR-#	CURB RAMP NUMBER
LL	LEVEL LANDING
BOC	BACK OF CURB
FOC	FACE OF CURB
2	GRADE CHANGE SHALL NOT EXCEED 11%

NOTE: ADDITIONAL LAYOUT POINTS LOCATED ON PAVING DETAIL SHEETS.

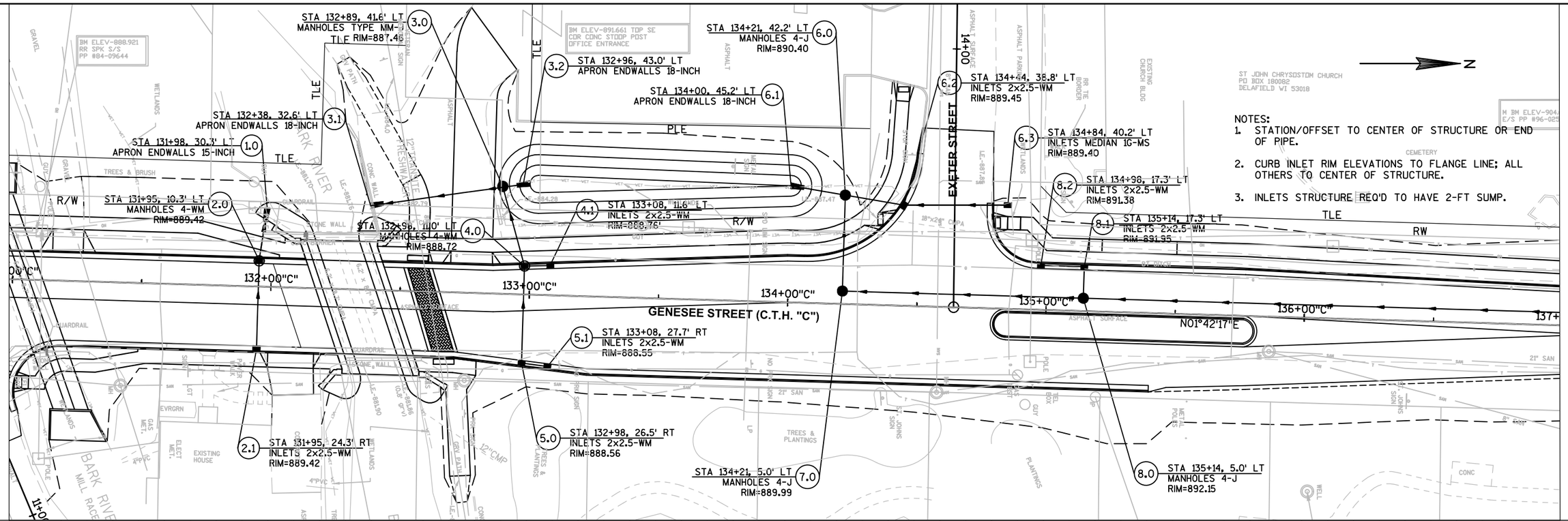

NOTES:

1. STATION/OFFSET TO CENTER OF STRUCTURE OR END OF PIPE.
2. CURB INLET RIM ELEVATIONS TO FLANGE LINE; ALL OTHERS TO CENTER OF STRUCTURE.
3. INLETS STRUCTURE REQ'D TO HAVE 2-FT SUMP.

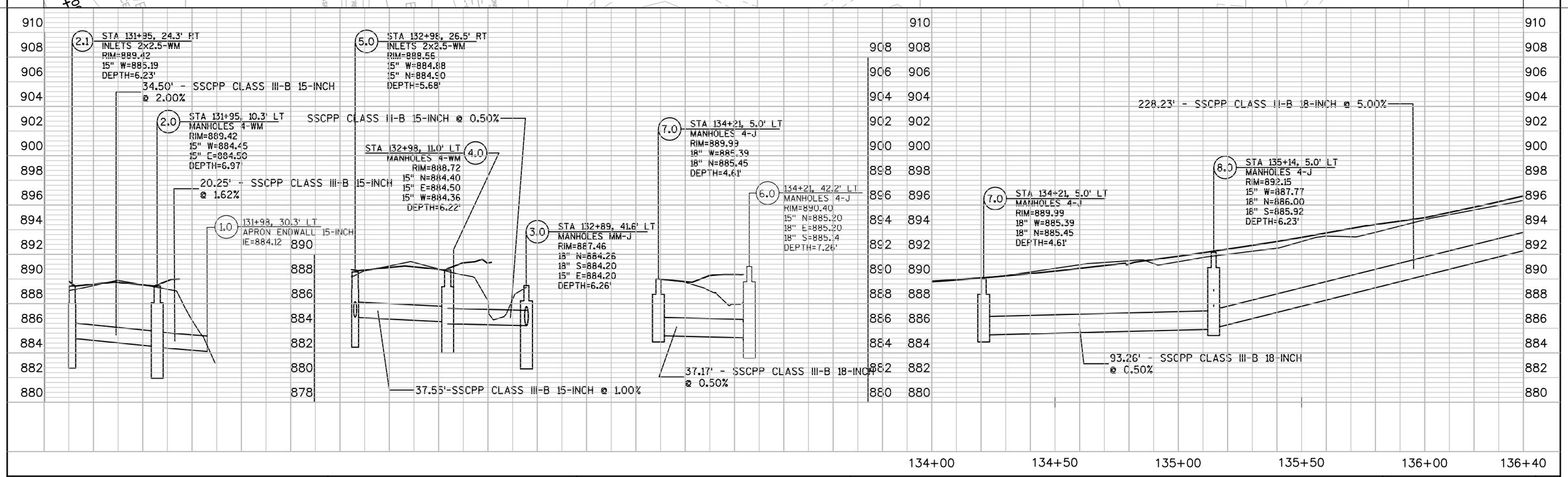

PROJECT NO:14-3775(11)	HWY:CTH "C"	COUNTY:WAUKESHA	STORM SEWER PLANS	SHEET -35-	E

NOTES:
1. STATION/OFFSET TO CENTER OF STRUCTURE OR END OF PIPE.
2. CURB INLET RIM ELEVATIONS TO FLANGE LINE; ALL OTHERS TO CENTER OF STRUCTURE.
3. INLETS STRUCTURE REQ'D TO HAVE 2-FT SUMP.

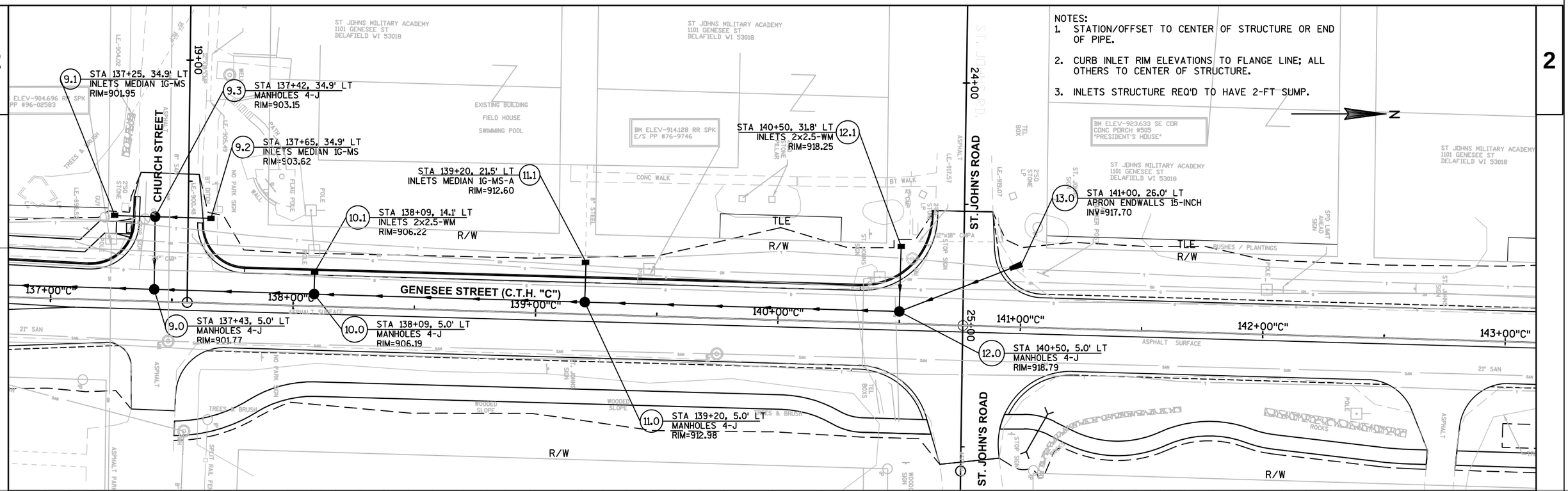

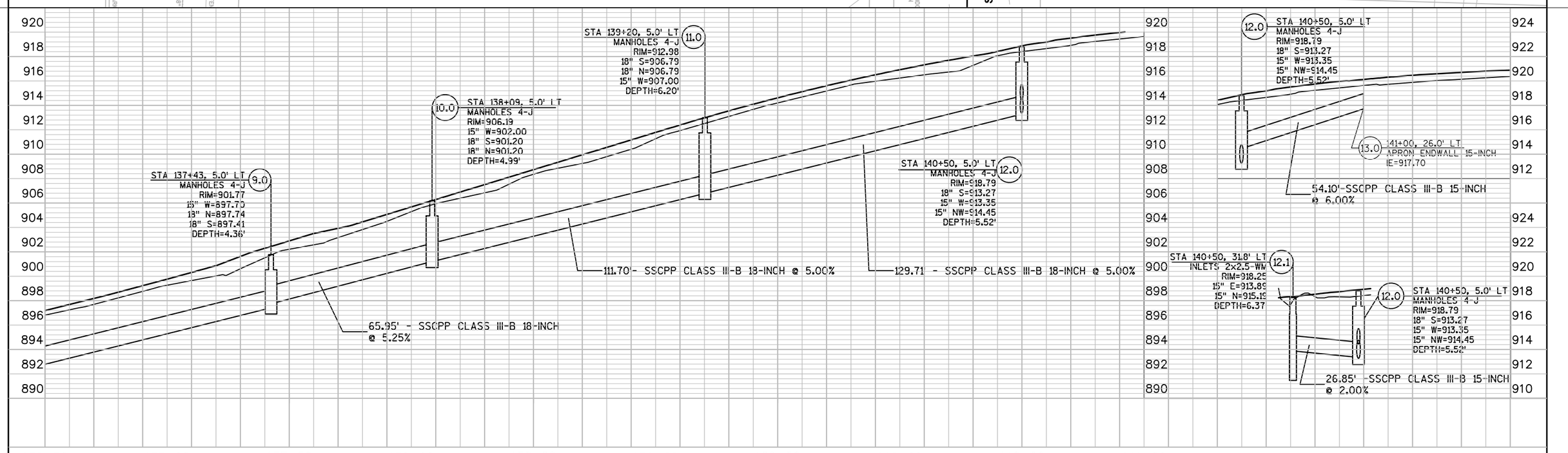

PROJECT NO:14-3775(11)	HWY:CTH "C"	COUNTY:WAUKESHA	STORM SEWER PLANS	SHEET 36	E

NOTES:
1. STATION/OFFSET TO CENTER OF STRUCTURE OR END OF PIPE.
2. CURB INLET RIM ELEVATIONS TO FLANGE LINE; ALL OTHERS TO CENTER OF STRUCTURE.
3. INLETS STRUCTURE REQ'D TO HAVE 2-FT SUMP.

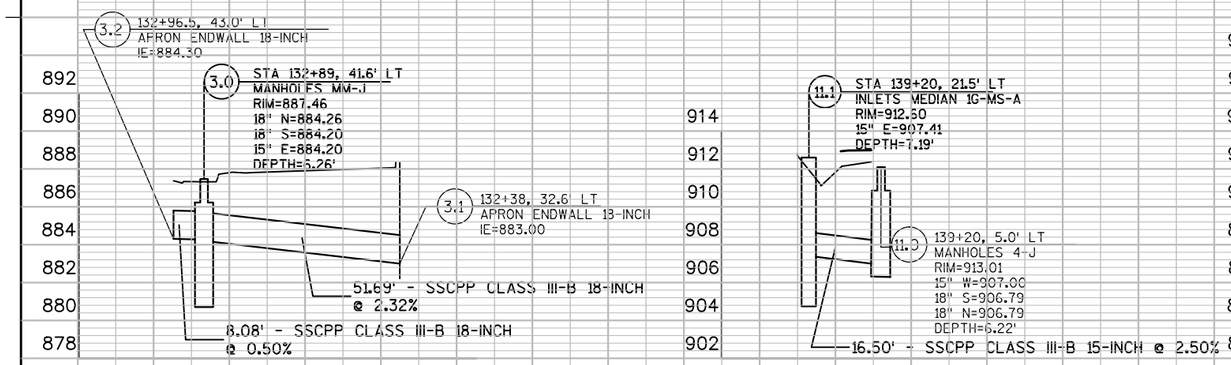

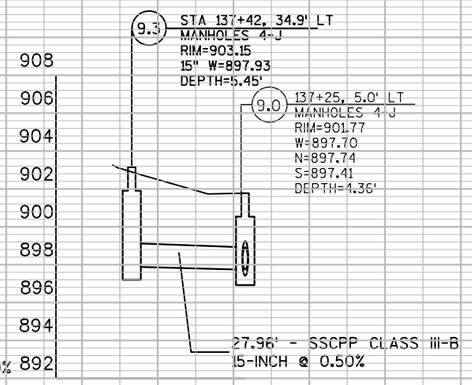

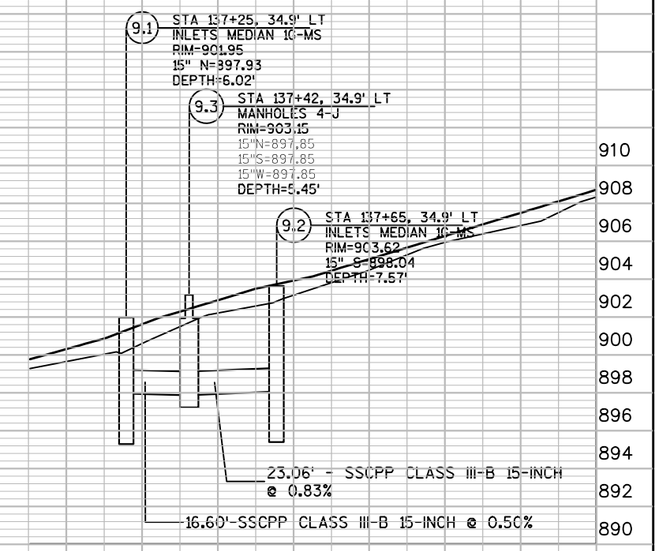

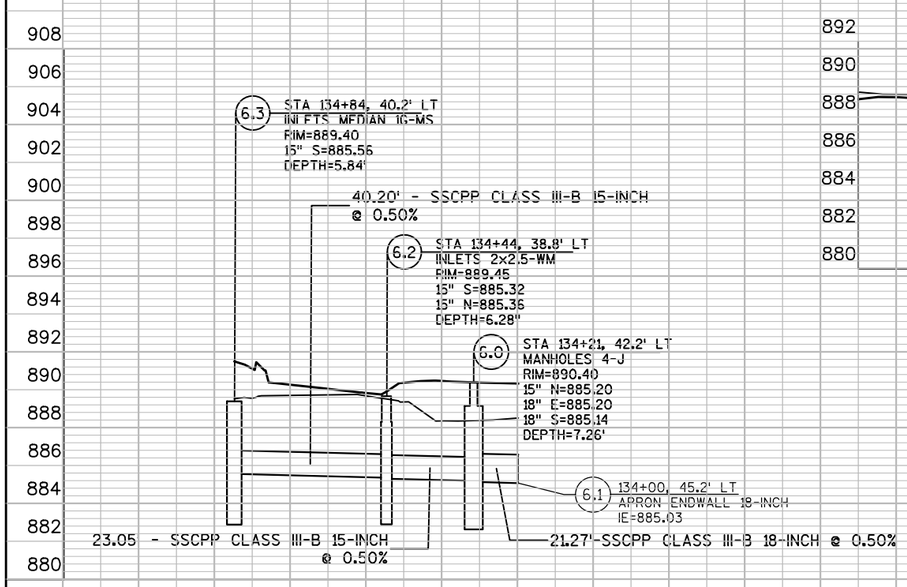

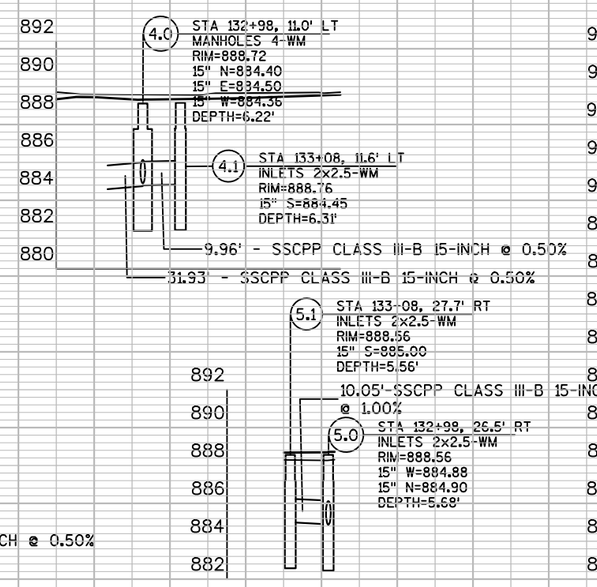

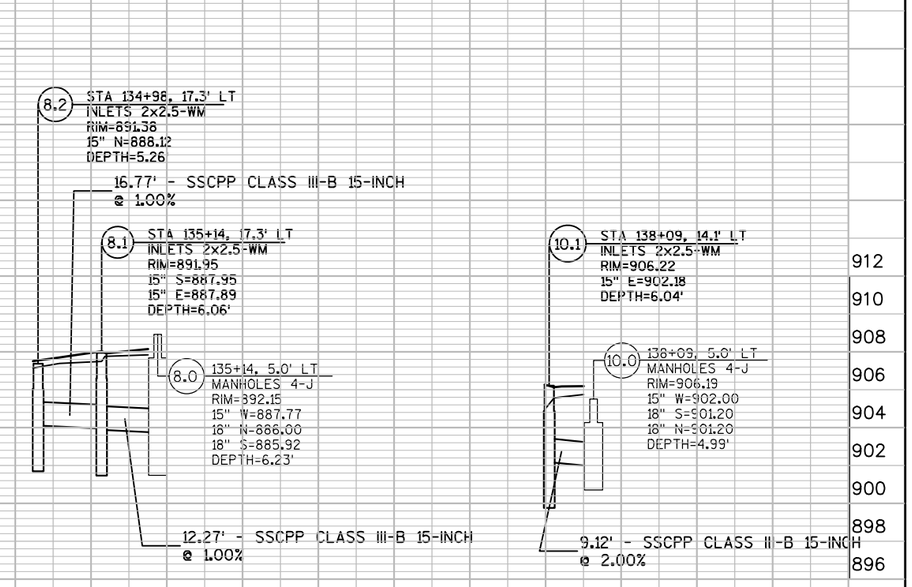

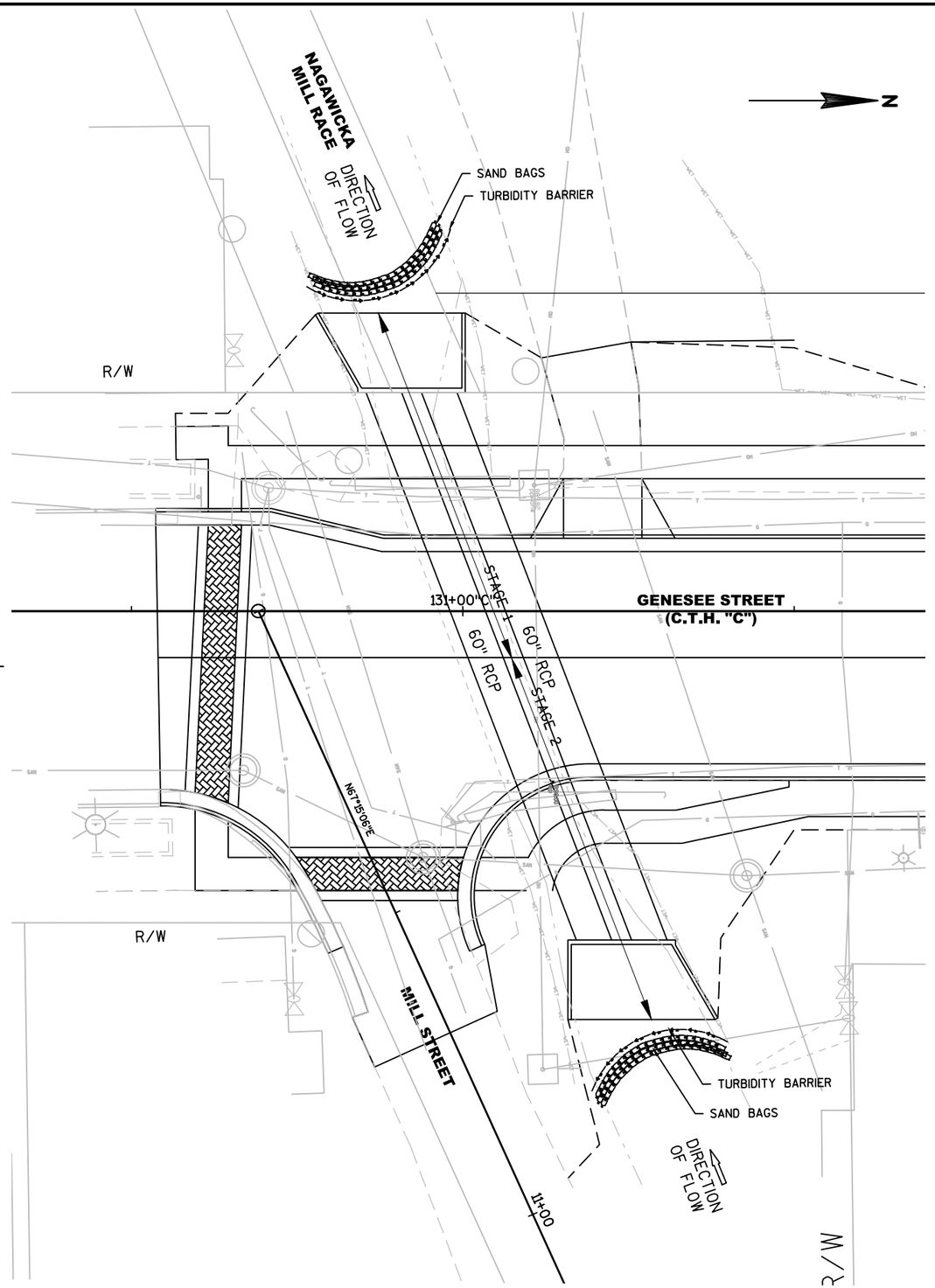

ANTICIPATED SEQUENCE OF OPERATIONS

THIS WORK IS ANTICIPATED TO BE COMPLETED DURING STAGES 1 & 2. WITH APPROVAL BY THE ENGINEER, THE CONTRACTOR MAY COMPLETE THE CULVERT REPLACEMENT AS A SINGLE OPERATION WITH A FULL ROAD CLOSURE OF NOT MORE THAN 3 DAYS.

INITIAL SETUP

1. INSTALL SANDBAGS AT STOP PLANK CHAMBER ON EARTHEN NAGAWICKA LAKE DAM TO SHUT-OFF FLOW THROUGH MILL RACE.
2. PLACE SANDBAGS AND TURBIDITY BARRIER AT UPSTREAM AND DOWNSTREAM ENDS OF WORK AREA.
3. BYPASS PUMPING MAY BE REQUIRED IN CONJUNCTION WITH DEWATERING ACTIVITIES TO MANAGE SEEPAGE INTO THE WORK AREA. A BYPASS PUMPING PLAN SHALL BE DEVELOPED AND APPROVED BY THE ENGINEER NOT LESS THAN 48 HOURS IN ADVANCE OF WORK COMMENCING FOR THE MILL RACE REMOVAL AND REPLACEMENT.
4. DEWATER AS NECESSARY INTO A GEOTEXTILE BAG INSIDE OF AN EROSION BALE ENCLOSURE PLACED ON A LEVEL AREA AT A LOCATION AS TO NOT ERODE THE BANKS OF THE WATERWAY.

CULVERT REMOVAL

1. REMOVE THE EXISTING 74" x 104" CMPA WITHIN THE WORK AREA.
2. SHORING SHALL BE PROVIDED AS NECESSARY TO MINIMIZE THE WIDTH OF THE WORK AREA.

CULVERT & CONCRETE ENDWALL INSTALLATION

1. FORM AND POUR DOWNSTREAM CONCRETE ENDWALL FLOOR.
2. INSTALL CULVERT PIPES
3. FORM AND POUR REMAINDER OF DOWNSTREAM CONCRETE ENDWALL AROUND CULVERT PIPES.
4. INSTALL REMAINDER OF CULVERT PIPE SECTIONS
5. FORM AND POUR UPSTREAM CONCRETE ENDWALL FLOOR.
6. FORM AND POUR REMAINDER OF UPSTREAM CONCRETE ENDWALL AROUND CULVERT PIPES.
7. BACKFILL CONCRETE ENDWALLS
8. INSTALL RAILING STEEL TYPE C1 GALVANIZED ALONG TOP EDGE OF CONCRETE ENDWALL.

REVISIONS TO THE ANTICIPATED SEQUENCE OF OPERATIONS SHALL BE APPROVED BY THE ENGINEER PRIOR TO THE START OF WORK.

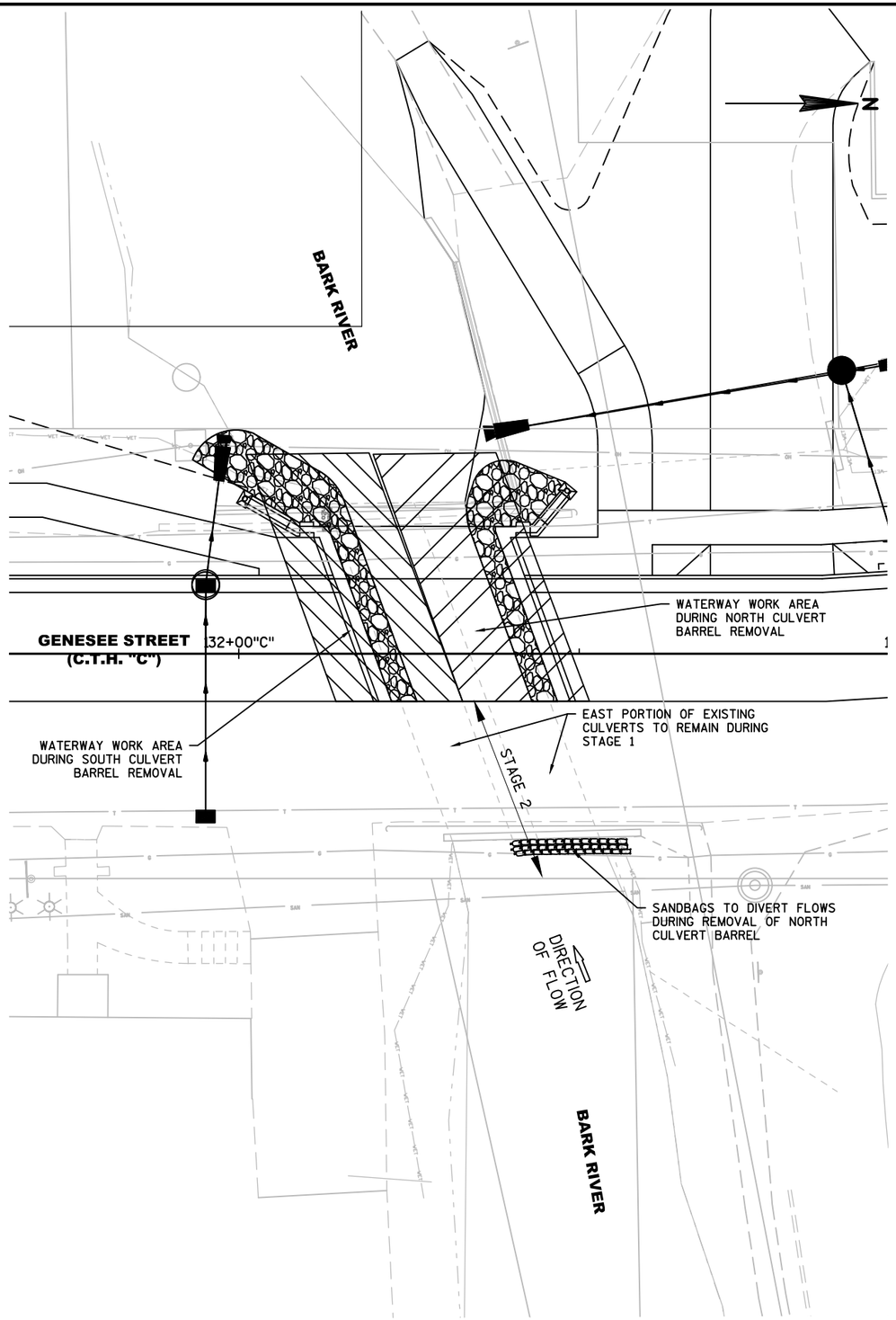

ANTICIPATED SEQUENCE OF OPERATIONS

B-67-358 IS TO BE CONSTRUCTED IN TWO HALVES DURING STAGES 2 & 3 WITH ONE LANE ON GENESEE STREET OPEN TO TRAFFIC.

STAGE 1 - WEST HALF

ABUTMENT CONSTRUCTION

1. EXCAVATE AND CONSTRUCT NORTH AND SOUTH ABUTMENTS WITH BARK RIVER FLOWS MAINTAINED THROUGH EXISTING CULVERTS.
2. BACKFILL BACK FACE OF ABUTMENTS.
3. DEWATER AS NECESSARY INTO A GEOTEXTILE BAG INSIDE OF AN EROSION BALE ENCLOSURE PLACED ON A LEVEL AREA AT A LOCATION AS TO NOT ERODE THE BANKS OF THE WATERWAY.

NORTH CULVERT BARREL REMOVAL

1. DIVERT NORMAL STREAM FLOWS INTO THE SOUTH BARREL AT THE UPSTREAM SIDE OF EXISTING CULVERTS.
2. REMOVE WEST PORTION OF NORTH CULVERT BARREL AS SHOWN ON THE TRAFFIC CONTROL PLANS.
3. RESTORE AND STABILIZE NORTH HALF OF STREAM BED WITH SALVAGED STONE OR RIPRAP MEDIUM.
4. BACKFILL FRONT FACE OF NORTH ABUTMENT AND PLACE RIPRAP HEAVY SCOUR PROTECTION.

SOUTH CULVERT BARREL REMOVAL

1. DIVERT NORMAL STREAM FLOWS INTO NORTH BARREL AT THE UPSTREAM SIDE OF EXISTING CULVERTS.
2. REMOVE WEST PORTION OF SOUTH CULVERT BARREL AS SHOWN ON THE TRAFFIC CONTROL PLANS.
3. RESTORE AND STABILIZE SOUTH HALF OF STREAM BED WITH SALVAGED STONE OR RIPRAP MEDIUM.
4. BACKFILL FRONT FACE OF SOUTH ABUTMENT AND PLACE RIPRAP HEAVY SCOUR PROTECTION.

SUPERSTRUCTURE CONSTRUCTION

1. CONSTRUCT WEST HALF OF SUPERSTRUCTURE.
2. COMPLETE TEMPORARY OR RESTORATION ADJACENT TO WING WALLS 2 & 3.

REVISIONS TO THE ANTICIPATED SEQUENCE OF OPERATIONS SHALL BE APPROVED BY THE ENGINEER PRIOR TO THE START OF WORK.

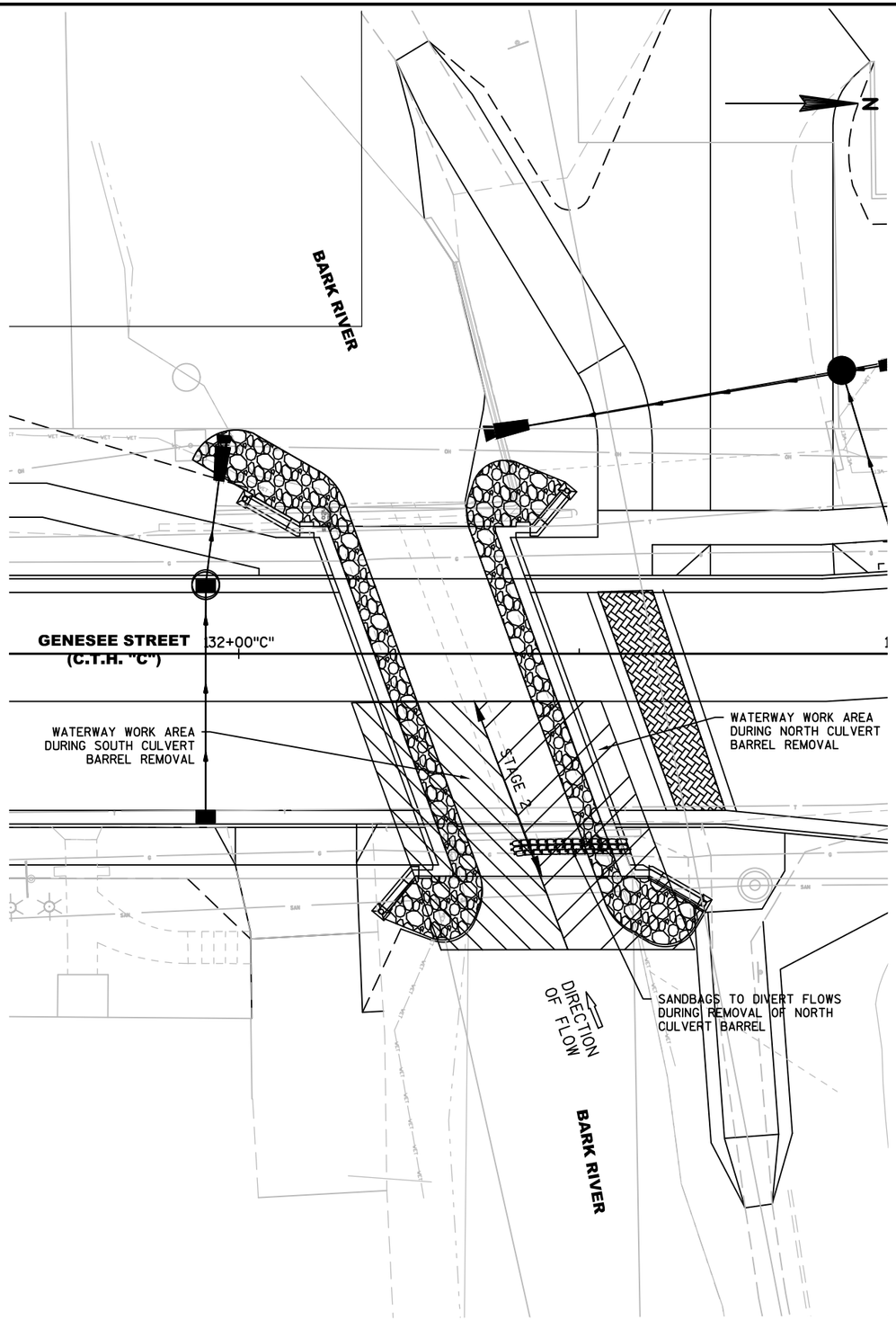

ANTICIPATED SEQUENCE OF OPERATIONS

B-67-358 IS TO BE CONSTRUCTED IN TWO HALVES DURING STAGES 2 & 3 WITH ONE LANE ON GENESEE STREET OPEN TO TRAFFIC.

STAGE 2 - EAST HALF

ABUTMENT CONSTRUCTION

1. EXCAVATE AND CONSTRUCT REMAINDER OF NORTH AND SOUTH ABUTMENTS WITH BARK RIVER FLOWS MAINTAINED THROUGH REMAINING PORTION OF EXISTING CULVERTS.
2. BACKFILL BACK FACE OF ABUTMENTS.
3. DEWATER AS NECESSARY INTO A GEOTEXTILE BAG INSIDE OF AN EROSION BALE ENCLOSURE PLACED ON A LEVEL AREA AT A LOCATION AS TO NOT ERODE THE BANKS OF THE WATERWAY.

NORTH CULVERT BARREL REMOVAL

1. DIVERT NORMAL STREAM FLOWS INTO THE SOUTH BARREL AT THE UPSTREAM SIDE OF EXISTING CULVERTS.
2. REMOVE REMAINDER OF NORTH CULVERT BARREL AS SHOWN ON THE TRAFFIC CONTROL PLANS.
3. RESTORE AND STABILIZE NORTH HALF OF STREAM BED WITH SALVAGED STONE OR RIPRAP MEDIUM.
4. BACKFILL FRONT FACE OF NORTH ABUTMENT AND PLACE RIPRAP HEAVY SCOUR PROTECTION.

SOUTH CULVERT BARREL REMOVAL

1. DIVERT NORMAL STREAM FLOWS INTO NORTH BARREL AT THE UPSTREAM SIDE OF EXISTING CULVERTS.
2. REMOVE REMAINDER OF SOUTH CULVERT BARREL AS SHOWN ON THE TRAFFIC CONTROL PLANS.
3. RESTORE AND STABILIZE SOUTH HALF OF STREAM BED WITH SALVAGED STONE OR RIPRAP MEDIUM.
4. BACKFILL FRONT FACE OF SOUTH ABUTMENT AND PLACE RIPRAP HEAVY SCOUR PROTECTION.

SUPERSTRUCTURE CONSTRUCTION

1. CONSTRUCT EAST HALF OF SUPERSTRUCTURE.
2. COMPLETE TEMPORARY OR RESTORATION ADJACENT TO WING WALLS 1 & 4.

REVISIONS TO THE ANTICIPATED SEQUENCE OF OPERATIONS SHALL BE APPROVED BY THE ENGINEER PRIOR TO THE START OF WORK.

2

REMOVE EXISTING CONC. WALL
RIPRAP SHORELINE

NOTE TO CONTRACTOR:
TURBIDITY BARRIER DETAIL SHALL BE
MODIFIED TO INCLUDE CONTINUOUS ANCHORING.

NAGAWICKA MILL RACE

BARK RIVER

TLE

PLE

R/W

EXETER STREET 14+00

N

STA 136"C"+00

130+00"C"

131+00"C"

132+00"C"

133+00"C"

134+00"C"

135+00"C"

136+0

GENESEE STREET
(C.T.H. "C")

B-67-0358

N01°42'17"E

N67°15'06"

MILL STREET

11+0

SAND BAGS

RIPRAP MEDIUM
CHANNEL LINING

RIPRAP HEAVY
SLOPE ARMORING

MATCH LINE

LEGEND

- EROSION MAT CLASS I, TYPE B (TOPSOIL, SEED, TEMP. SEED, FERT.)
- EROSION MAT CLASS II, TYPE C (TOPSOIL, SEED, TEMP. SEED, FERT.)
- SOD
- RIPRAP, MEDIUM
- SILT FENCE
- INLET PROTECTION, TYPE B, C OR D
- WATTLE DITCH CHECK
- CULVERT PIPE CHECK
- TURBIDITY BARRIER
- SAND BAGS (INCIDENTAL)

CHURCH STREET 19+00

ST. JOHNS ROAD

STA 136"C"+00

STA 142"C"+00

137+00"C"

138+00"C"

139+00"C"

140+00"C"

141+00"C"

142+0

25+00

GENESEE STREET (C.T.H. "C")

TREE PROTECTION
(TYP.)

MATCH LINE

PROJECT NO:14-3775(11)	HWY:CTH "C"	COUNTY:WAUKESHA	EROSION CONTROL DETAILS	SHEET 41	E

FILE NAME : S:\CAD PROJECTS\409-14 CTH C\SHT\14-3775(11) SHEET EROSION CONTROL.DWG
LAYOUT NAME - ****
PLOT DATE : 12/23/2015 11:54 AM PLOT BY : HMERSON PLOT NAME : PLOT SCALE : 1" = 40'_XREF

2

STA 142"C"+00

R/W

TLE

R/W

WISCONSIN AVENUE

R/W

TLE

R/W

R/W

ANDERSON DRIVE

N

STA 148"C"+00

00"C" 143+00"C" 144+00"C" 145+00"C" 146+00"C" 147+00"C" 148+

GENESEE STREET (C.T.H. "C")

MATCH LINE

R/W

SILT FENCE (TYP.)

TREE PROTECTION (TYP.)

R/W

SILT FENCE (TYP.)

R

MATCH LINE

2

LEGEND

- EROSION MAT CLASS I, TYPE B (TOPSOIL, SEED, TEMP. SEED, FERT.)
- EROSION MAT CLASS II, TYPE C (TOPSOIL, SEED, TEMP. SEED, FERT.)
- SOD
- RIPRAP, MEDIUM
- SILT FENCE
- INLET PROTECTION, TYPE B, C OR D
- WATTLE DITCH CHECK
- CULVERT PIPE CHECK
- TURBIDITY BARRIER
- SAND BAGS (INCIDENTAL)

STA 154"C"+00

OAKWOOD DRIVE

EP: 155+30.31

00"C" 155+00"C"

MATCH LINE

WESTSHORE DRIVE

STA 148"C"+00

R/W

TLE

R/W

STA 154"C"+00

00"C" 149+00"C" 150+00"C" 151+00"C" 152+00"C" 153+00"C" 154+

N01°42'17"E

GENESEE STREET (C.T.H. "C")

MATCH LINE

/W

TREE PROTECTION (TYP.)

R/W

ST. JOHNS DRIVE

R/W

SILT FENCE (TYP.)

TREE PROTECTION (TYP.)

SILT FENCE (TYP.)

R/W

MATCH LINE

PROJECT NO:14-3775(11)	HWY:CTH "C"	COUNTY:WAUKESHA	EROSION CONTROL DETAILS	SHEET 42	E

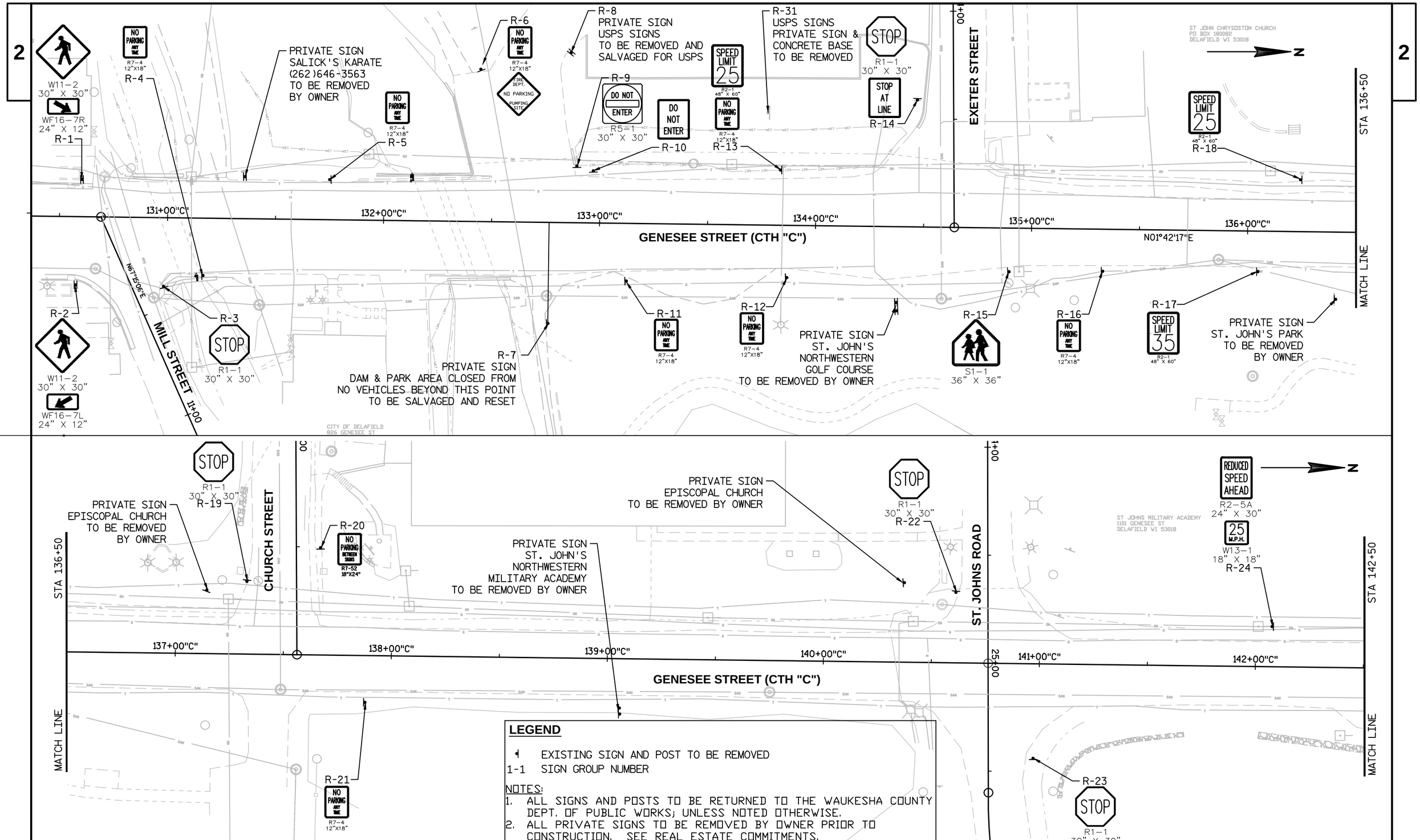

LEGEND

◄ EXISTING SIGN AND POST TO BE REMOVED

1-1 SIGN GROUP NUMBER

NOTES:

1. ALL SIGNS AND POSTS TO BE RETURNED TO THE WAUKESHA COUNTY DEPT. OF PUBLIC WORKS; UNLESS NOTED OTHERWISE.
2. ALL PRIVATE SIGNS TO BE REMOVED BY OWNER PRIOR TO CONSTRUCTION. SEE REAL ESTATE COMMITMENTS.

PROJECT NO:14-3775(11)	HWY:CTH "C"	COUNTY:WAUKESHA	SIGN REMOVAL PLAN	SHEET 43	E

FILE NAME : S:\CAD PROJECTS\409-14 CTH C\SHT\14-3775(11) SHEET SIGNING.DWG
LAYOUT NAME - ****
PLOT DATE : 11/16/2015 11:44 AM PLOT BY : HMERSON PLOT NAME : PLOT SCALE : **********

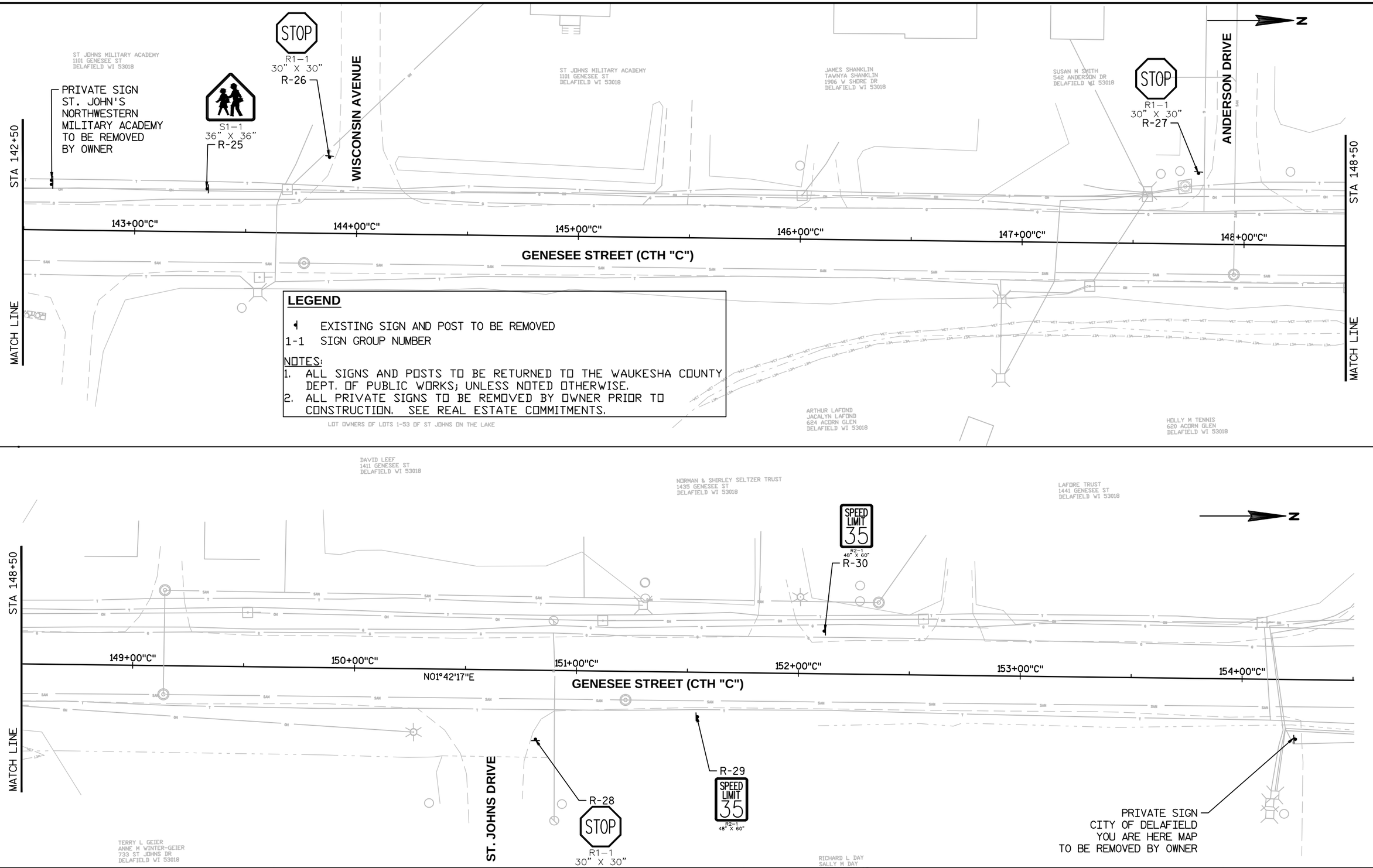

2

PROJECT NO:14-3775(11)	HWY: CTH "C"	COUNTY: WAUKESHA	SIGN REMOVAL PLAN	SHEET 44	E

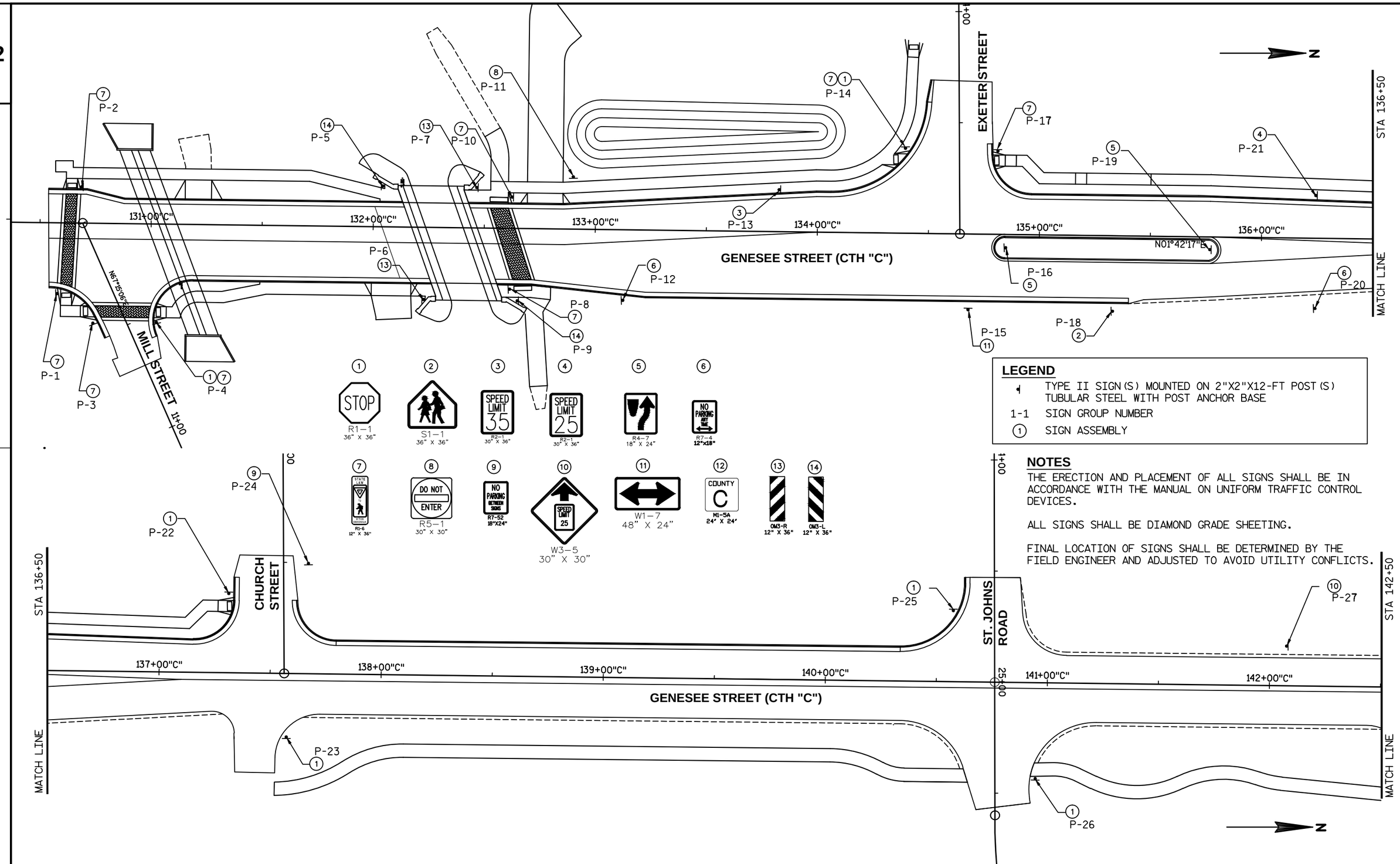

LEGEND

◄	TYPE II SIGN(S) MOUNTED ON 2"X2"X12-FT POST(S) TUBULAR STEEL WITH POST ANCHOR BASE
1-1	SIGN GROUP NUMBER
(1)	SIGN ASSEMBLY

NOTES

THE ERECTION AND PLACEMENT OF ALL SIGNS SHALL BE IN ACCORDANCE WITH THE MANUAL ON UNIFORM TRAFFIC CONTROL DEVICES.

ALL SIGNS SHALL BE DIAMOND GRADE SHEETING.

FINAL LOCATION OF SIGNS SHALL BE DETERMINED BY THE FIELD ENGINEER AND ADJUSTED TO AVOID UTILITY CONFLICTS.

PROJECT NO:14-3775(11)	HWY:CTH "C"	COUNTY:WAUKESHA	PERMANENT SIGNING PLAN	SHEET 45	E

FILE NAME : S:\CAD PROJECTS\409-14 CTH C\SHT\14-3775(11) SHEET SIGNING.DWG
LAYOUT NAME - ****
PLOT DATE : 11/25/2015 11:51 AM PLOT BY : HMERSON PLOT NAME : PLOT SCALE : **********

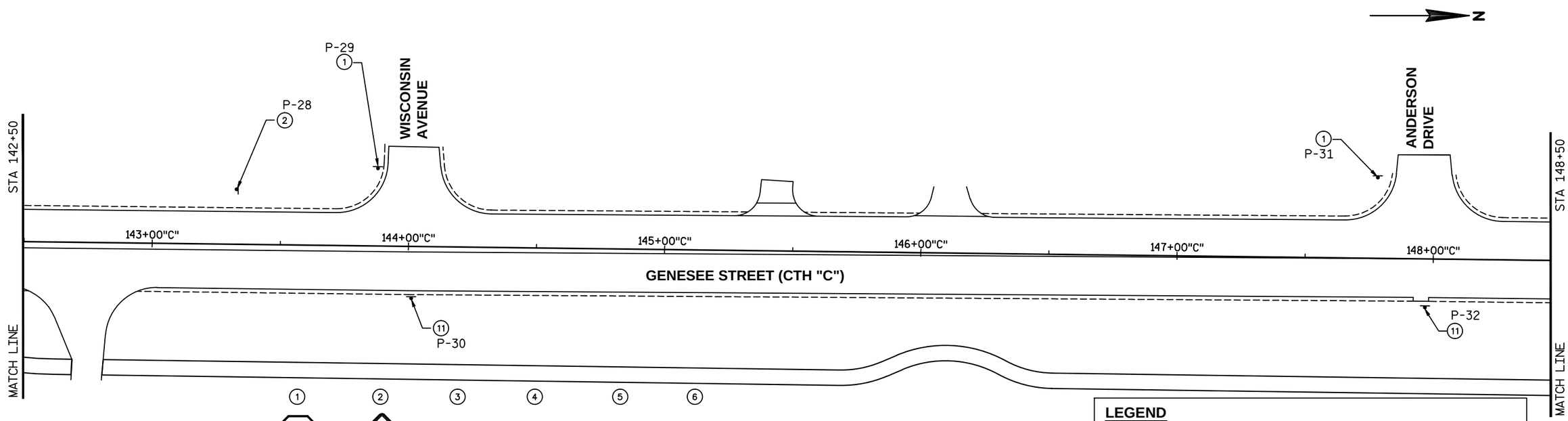

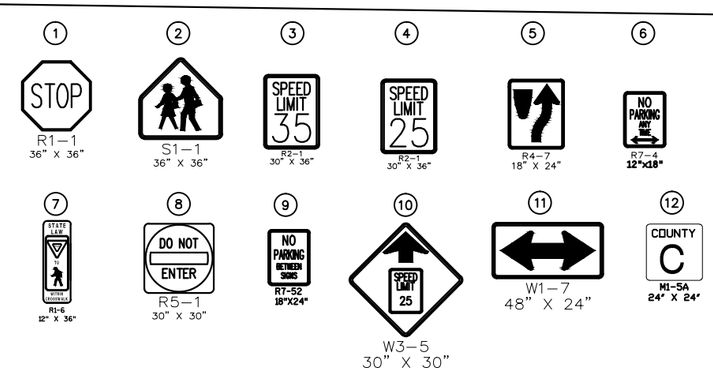

LEGEND

◄	TYPE II SIGN(S) MOUNTED ON 2"X2"X12-FT POST(S) TUBULAR STEEL WITH POST ANCHOR BASE
1-1	SIGN GROUP NUMBER
(1)	SIGN ASSEMBLY

NOTES

THE ERECTION AND PLACEMENT OF ALL SIGNS SHALL BE IN ACCORDANCE WITH THE MANUAL ON UNIFORM TRAFFIC CONTROL DEVICES.

ALL SIGNS SHALL BE DIAMOND GRADE SHEETING.

FINAL LOCATION OF SIGNS SHALL BE DETERMINED BY THE FIELD ENGINEER AND ADJUSTED TO AVOID UTILITY CONFLICTS.

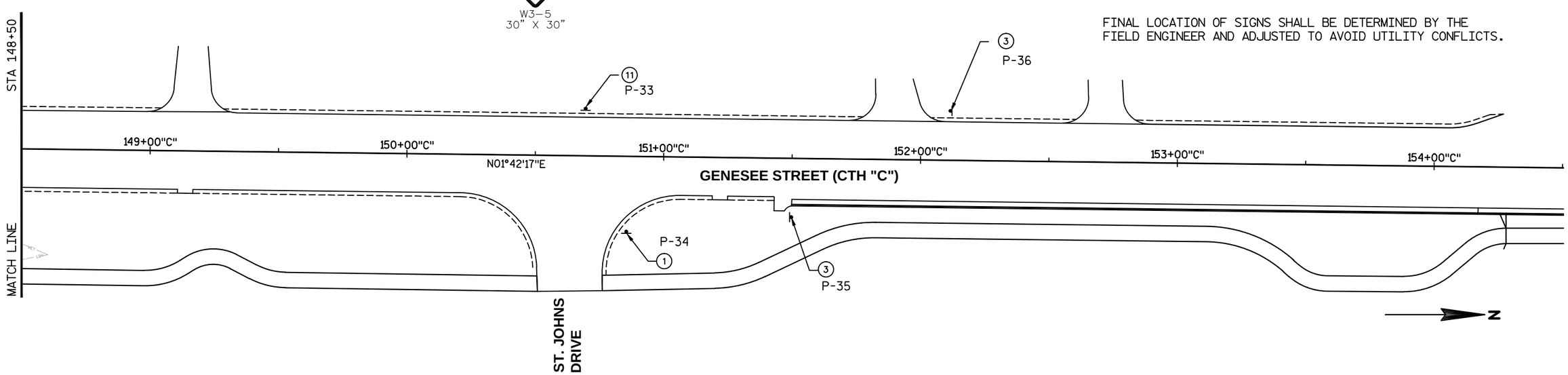

PROJECT NO:14-3775(11)	HWY:CTH "C"	COUNTY:WAUKESHA	PERMANENT SIGNING PLAN	SHEET 46	E

FILE NAME : S:\CAD PROJECTS\409-14 CTH C\SHT\14-3775(11) SHEET SIGNING.DWG
LAYOUT NAME - ****
PLOT DATE : 11/25/2015 11:51 AM PLOT BY : HMERSON PLOT NAME : PLOT SCALE : **********

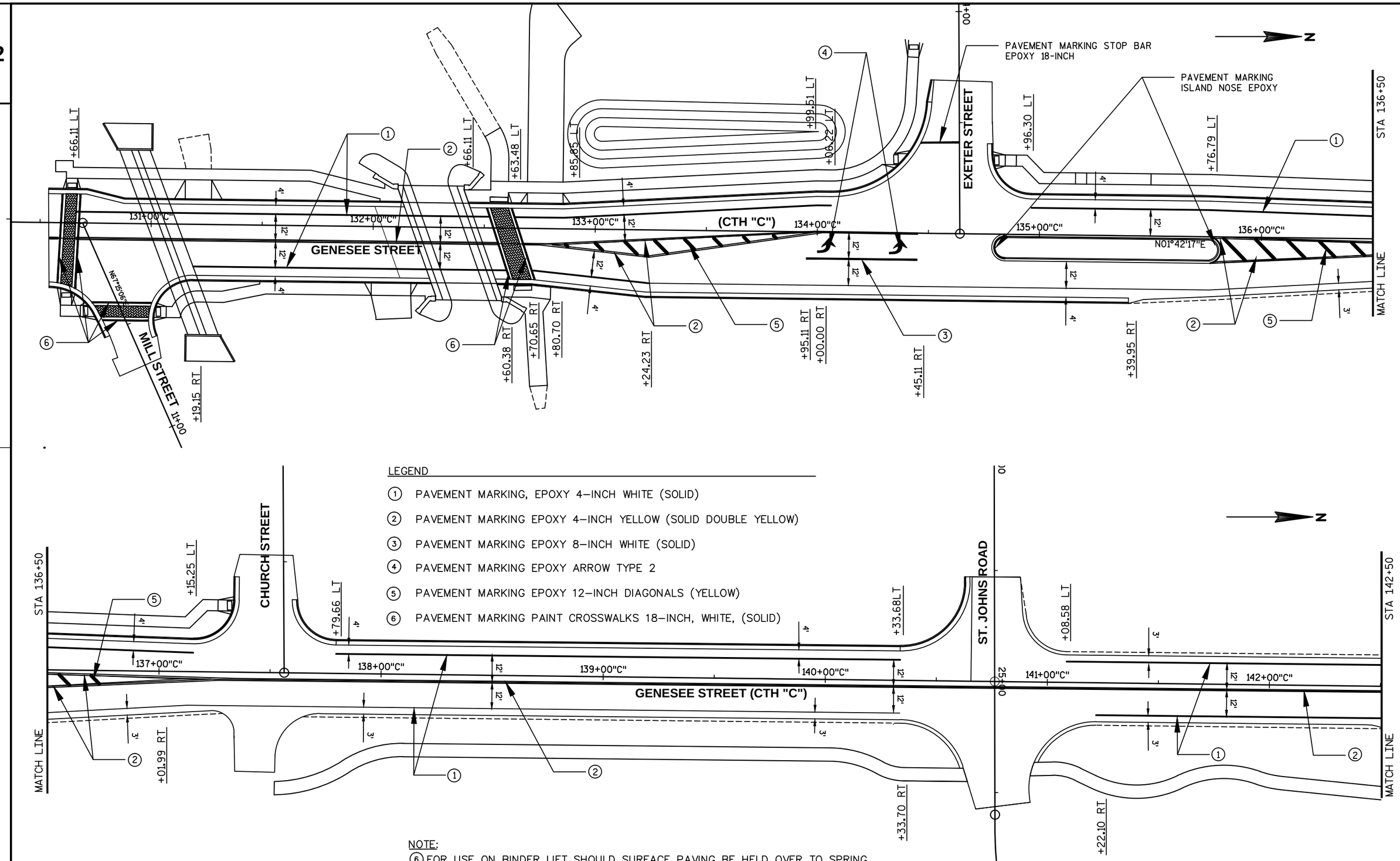

LEGEND

1. PAVEMENT MARKING, EPOXY 4-INCH WHITE (SOLID)
2. PAVEMENT MARKING EPOXY 4-INCH YELLOW (SOLID DOUBLE YELLOW)
3. PAVEMENT MARKING EPOXY 8-INCH WHITE (SOLID)
4. PAVEMENT MARKING EPOXY ARROW TYPE 2
5. PAVEMENT MARKING EPOXY 12-INCH DIAGONALS (YELLOW)
6. PAVEMENT MARKING PAINT CROSSWALKS 18-INCH, WHITE, (SOLID)

NOTE:

6 FOR USE ON BINDER LIFT SHOULD SURFACE PAVING BE HELD OVER TO SPRING

PROJECT NO:14-3775(11)	HWY: CTH "C"	COUNTY: WAUKESHA	PAVEMENT MARKING PLAN	SHEET 47	E

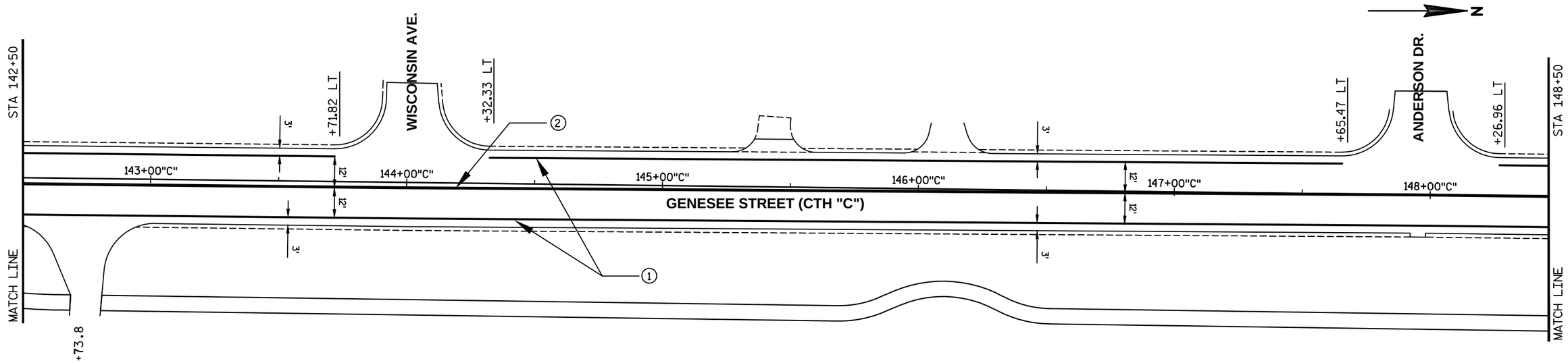

LEGEND

1. PAVEMENT MARKING, EPOXY 4-INCH WHITE (SOLID)
2. PAVEMENT MARKING EPOXY 4-INCH YELLOW (SOLID DOUBLE YELLOW)
3. PAVEMENT MARKING EPOXY 8-INCH WHITE (SOLID)
4. PAVEMENT MARKING EPOXY ARROWS
5. PAVEMENT MARKING EPOXY 12-INCH DIAGONALS (YELLOW)
6. PAVEMENT MARKING PAINT CROSSWALKS 18-INCH, WHITE, (SOLID)

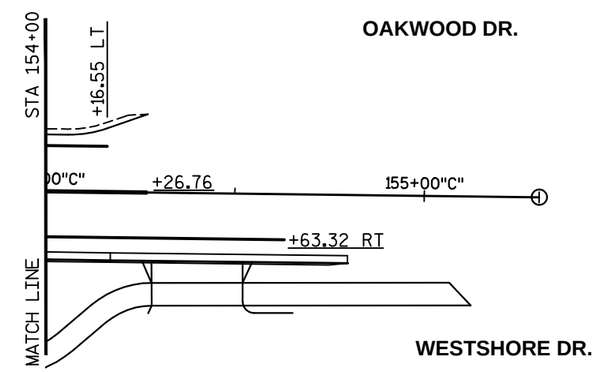

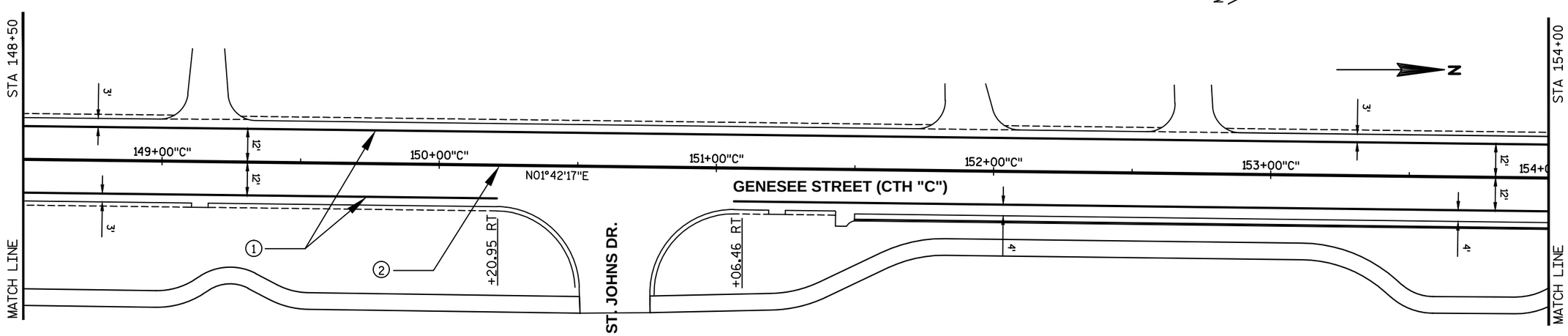

NOTE:

6. FOR USE ON BINDER LIFT SHOULD SURFACE PAVING BE HELD OVER TO SPRING

PROJECT NO:14-3775(11)	HWY:CTH "C"	COUNTY:WAUKESHA	PAVEMENT MARKING PLAN	SHEET 48	E

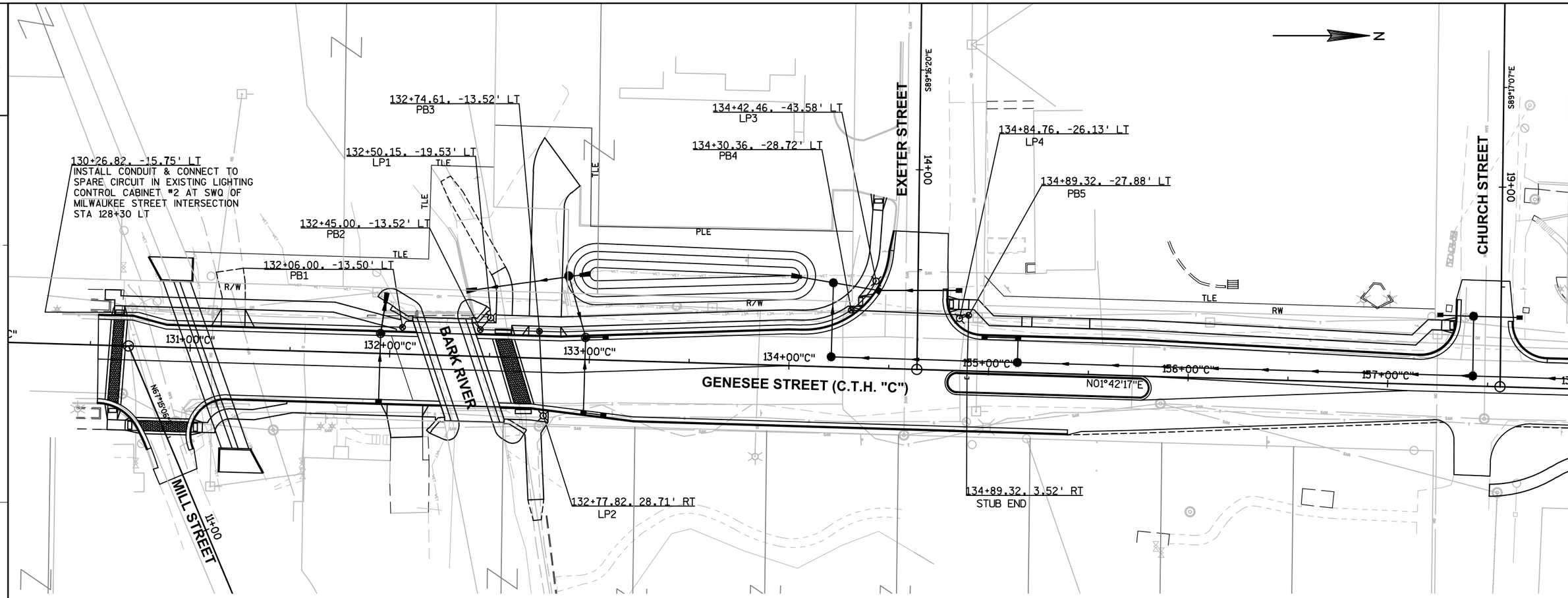

LIGHTING PLAN LEGEND

- SINGLE LIGHTING UNIT: 12' CONCRETE POLE, LED LUMINAIRE, FLAG HOLDER, (2) BANNER HOLDERS, (2) LADDERS RESTS, TYPE 1 MODIFIED CONCRETE BASE
- PULL BOX (STEEL 24 X 42-INCH)
- CONDUIT RIGID NONMETALLIC 2-INCH WITH 2-12 AWG & 1-8 AWG GROUND
- CONDUIT STUBOUT CAPPED
- 50+20, 10'RT — STATION (LOCATION)
- LP# (1-#) — CIRCUIT NUMBER; POLE NUMBER

SERVICE WIRING DIAGRAM

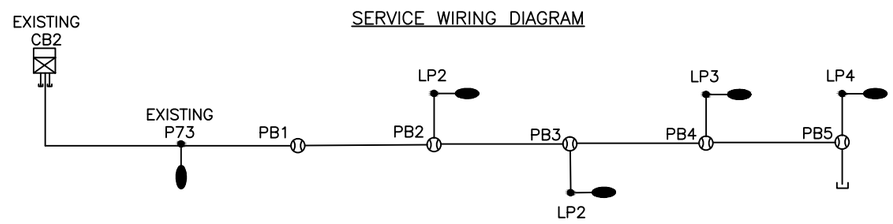

NOTES:

1. THE ENGINEER WILL APPROVE THE FINAL LOCATION OF ALL CONCRETE BASES AND PULL BOXES IN THE FIELD PRIOR TO CONSTRUCTION.
2. 2" DRAIN DUCT TO DITCH OR STORM SEWER REQUIRED FOR ALL PULL BOXES. THIS 2" DRAIN DUCT IS INCIDENTAL TO THE PULL BOX BID ITEM.
3. THE LOCATION OF EXISTING AND PROPOSED UTILITIES AS SHOWN ON THE PLANS ARE APPROXIMATE. IN ADDITION, THERE MAY BE OTHER UTILITIES WITHIN THE PROJECT AREA WHICH ARE NOT SHOWN. THE CONTRACTOR SHALL VERIFY THE LOCATIONS OF ALL UTILITIES PRIOR TO CONSTRUCTION.
4. CONSTRUCT ALL CONCRETE BASES WITH ANCHOR BOLTS PARALLEL TO THE ADJACENT CURB.
5. ALL CONDUIT SHALL BE 2" RIGID NON-METALLIC SCHEDULE 40 2-INCH, WITH 2#6, 1#6 GRD CONDUCTORS

PROJECT NO:14-3775(11)	HWY:CTH "C"	COUNTY:WAUKESHA	STREE LIGHTING PLAN	SHEET --49-	E

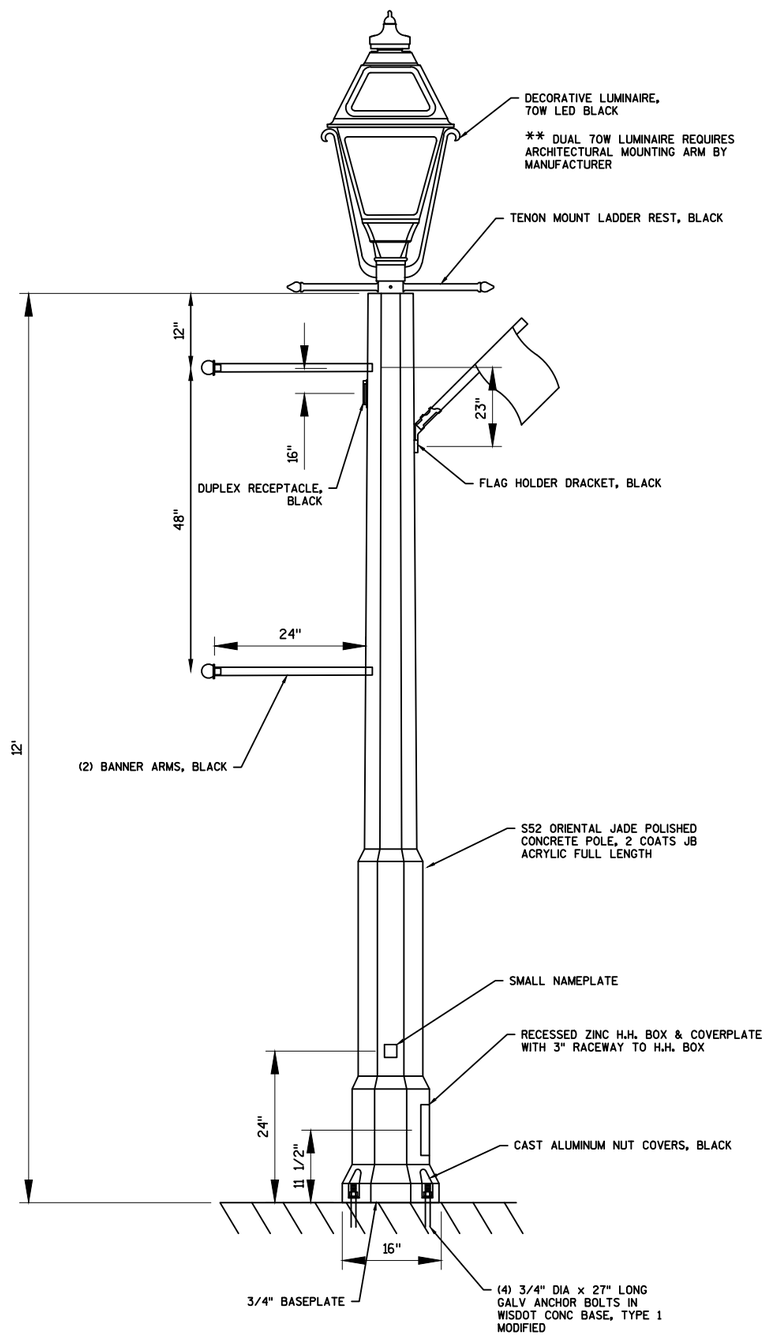

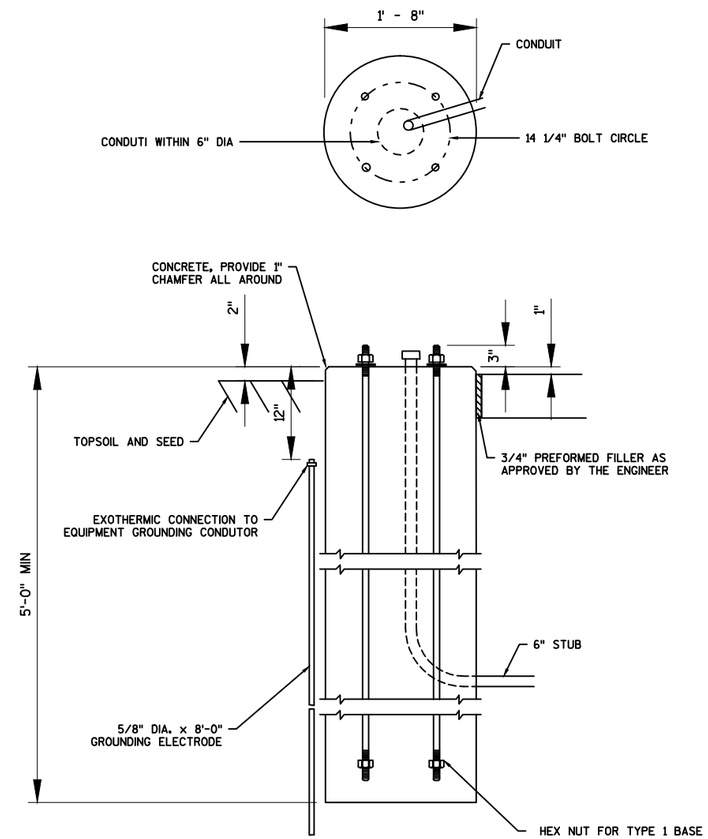

WISDOT CONCRETE BASE, TYPE 1 MODIFIED

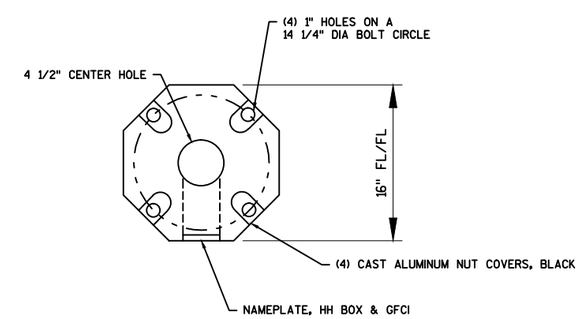

BASEPLATE DETAIL
3/4" GALV STEEL

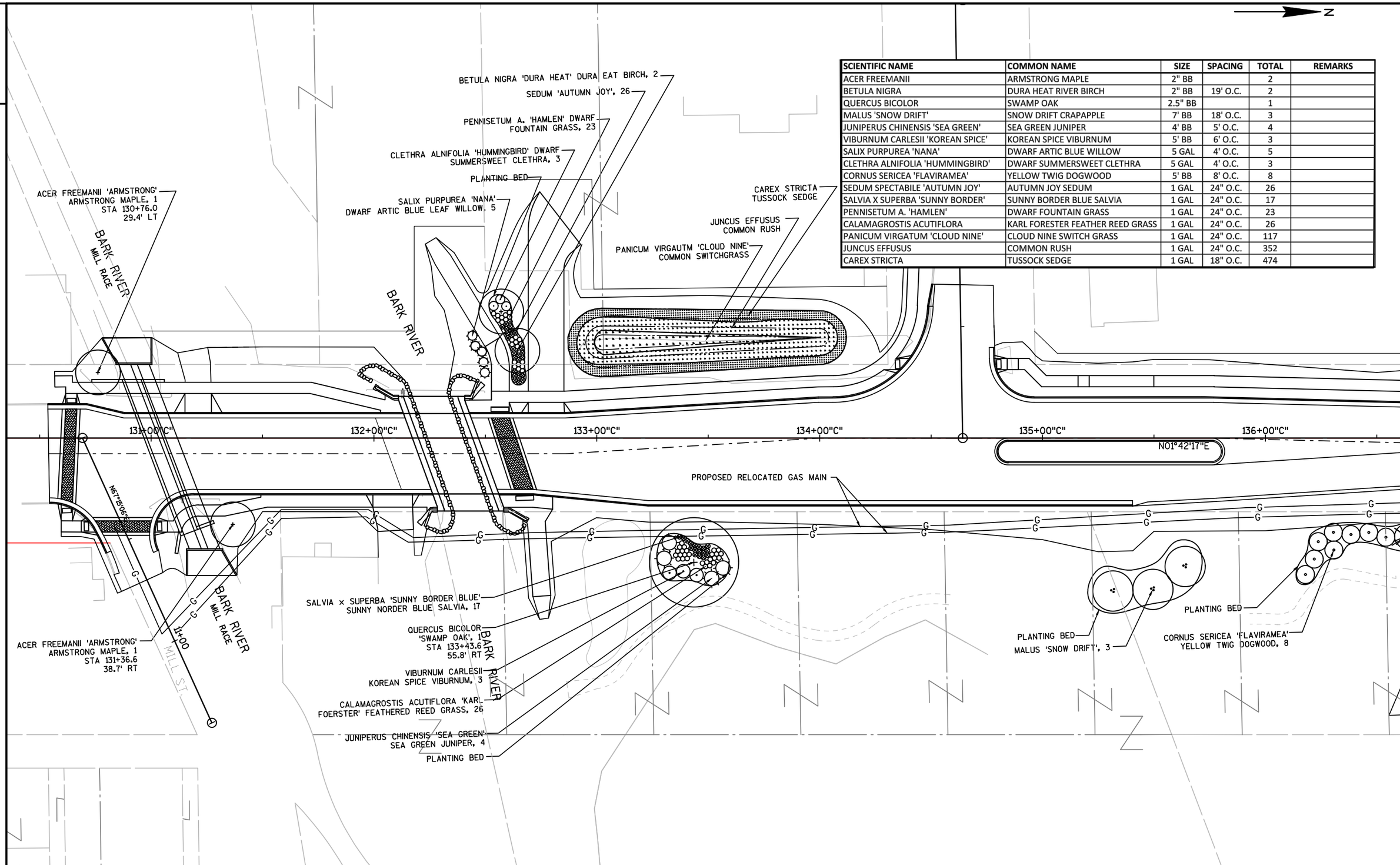

SCIENTIFIC NAME	COMMON NAME	SIZE	SPACING	TOTAL	REMARKS
ACER FREEMANII	ARMSTRONG MAPLE	2" BB		2	
BETULA NIGRA	DURA HEAT RIVER BIRCH	2" BB	19' O.C.	2	
QUERCUS BICOLOR	SWAMP OAK	2.5" BB		1	
MALUS 'SNOW DRIFT'	SNOW DRIFT CRAPAPPLE	7' BB	18' O.C.	3	
JUNIPERUS CHINENSIS 'SEA GREEN'	SEA GREEN JUNIPER	4' BB	5' O.C.	4	
VIBURNUM CARLESII 'KOREAN SPICE'	KOREAN SPICE VIBURNUM	5' BB	6' O.C.	3	
SALIX PURPUREA 'NANA'	DWARF ARTIC BLUE WILLOW	5 GAL	4' O.C.	5	
CLETHRA ALNIFOLIA 'HUMMINGBIRD'	DWARF SUMMERSWEET CLETHRA	5 GAL	4' O.C.	3	
CORNUS SERICEA 'FLAVIRAMEA'	YELLOW TWIG DOGWOOD	5' BB	8' O.C.	8	
SEDUM SPECTABILE 'AUTUMN JOY'	AUTUMN JOY SEDUM	1 GAL	24" O.C.	26	
SALVIA X SUPERBA 'SUNNY BORDER'	SUNNY BORDER BLUE SALVIA	1 GAL	24" O.C.	17	
PENNISETUM A. 'HAMLEN'	DWARF FOUNTAIN GRASS	1 GAL	24" O.C.	23	
CALAMAGROSTIS ACUTIFLORA	KARL FORESTER FEATHER REED GRASS	1 GAL	24" O.C.	26	
PANICUM VIRGATUM 'CLOUD NINE'	CLOUD NINE SWITCH GRASS	1 GAL	24" O.C.	117	
JUNCUS EFFUSUS	COMMON RUSH	1 GAL	24" O.C.	352	
CAREX STRICTA	TUSSOCK SEDGE	1 GAL	18" O.C.	474	

2

SCIENTIFIC NAME	COMMON NAME	SIZE	SPACING	TOTAL	REMARKS
ACER SACCHARINUM	SILVER MAPLE	2" BB		1	
ACER FREEMANI	ARMSTRONG MAPLE	2" BB		1	
BETULA NIGRA	DURA HEAT RIVER BIRCH	2" BB	16' O.C.	4	
QUERCUS MACROCARPA	BUR OAK	2" BB		2	
THUJA OCCIDENATLIS 'NIGRA'	DARK GREEN ARBORVITAE	9' BB	7' O.C.	7	
THUJA OCCIDENTALIS 'GREEN GIANT'	GREEN GIANT ARBORVITAE	9' BB	10' O.C.	14	
PICEA PUNGENS 'HOOPSI BLUE'	COLORADO BLUE SPRUCE	9' BB	14' O.C.	3	
VIBUNRUM CARLESII	KOREAN SPICE VIBURNUM	5' BB	8' O.C.	4	
HYDRANGEA PANICULATA 'CULTIVAR'	LIMELIGHT HYDRANGEA	4' BB	6' O.C.	4	
JUNIPERUS CHINENSIS 'SARGENTII'	GREEN SARGENT JUNIPER	18" BB	5' O.C.	25	
SEDUM SPECTABILE 'AUTUMN JOY'	AUTUMN JOY SEDUM	1 GAL	24"	32	
SALVIA X SUPERBA 'SUNNY BORDER'	SUNNY BORDER BLUE SALVIA	1 GAL	24"	20	
PANICUM VIRGATUM 'HEAVY METAL'	HEAVY METAL SWITCH GRASS	1 GAL	24"	36	
SCHIZACHYRIUM SCOPARIUM	LITTLE BLUESTEM	1 GAL	24"	80	RANDOM MIX WITHIN PLANTING AREA
SPOROBOLUS HETEROLEPIS	PRAIRIE DROPSEED	1 GAL	24"	80	RANDOM MIX WITHIN PLANTING AREA
SORGHASTRUM NUTANS	INDIAN GRASS	1 GAL	24"	80	RANDOM MIX WITHIN PLANTING AREA

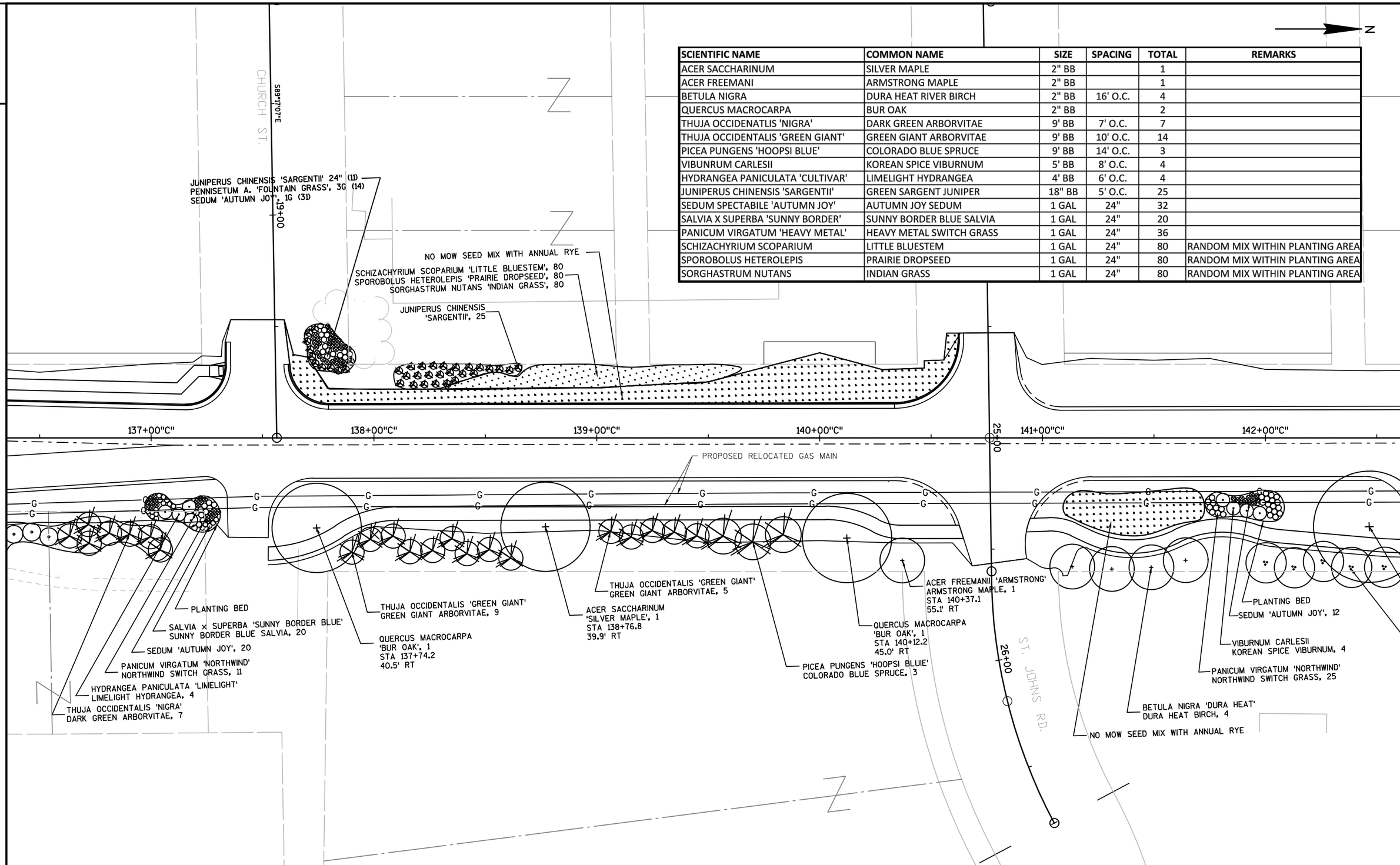

2

PROJECT NO:14-3775(11)	HWY:CTH "C"	COUNTY:WAUKESHA	LANDSCAPING PLAN	SHEET 52	E

2

SCIENTIFIC NAME	COMMON NAME	SIZE	SPACING	TOTAL	REMARKS
ACER SACCHARINUM	SILVER MAPLE	2" BB		2	
ACER FREEMANI'ARMSTRONG'	ARMSTRONG MAPLE	2" BB	17' O.C.	2	
ACER RUBRUM 'AUTUMN FLAME'	AUTUMN FLAME MAPLE	2" BB	23' O.C.	3	
AMELANCHIER GRANDIFLORA	AUTUMN BRILLANCE SERVICEBERRY	6' BB	14' O.C.	5	
BETULA NIGRA	DURA HEAT RIVER BIRCH	2" BB	16' O.C.	2	
QUERCUS ALBA	WHITE OAK	2" BB		1	
QUERCUS BICOLOR	SWAMP OAK	2" BB		1	
GINGKO BILOBA	GINGKO TREE	2" BB		1	
LARIX LARICINA	AMERICAN LARCH	2" BB	18' O.C.	2	
THUJA OCCIDENTALIS 'GREEN GIANT'	GREEN GIANT ARBORVITAE	9' BB	10' O.C.	11	
PICEA PUNGENS 'HOOPSI BLUE'	COLORADO BLUE SPRUCE	9' BB	14' O.C.	6	
CORNUS KOUSA	KOUSA DOGWOOD	6' BB	15' O.C.	3	
PHYSOCARPUS OPULIFOLIUS 'DIABLO'	DIABLO NINEBARK	36" BB	9' O.C.	8	

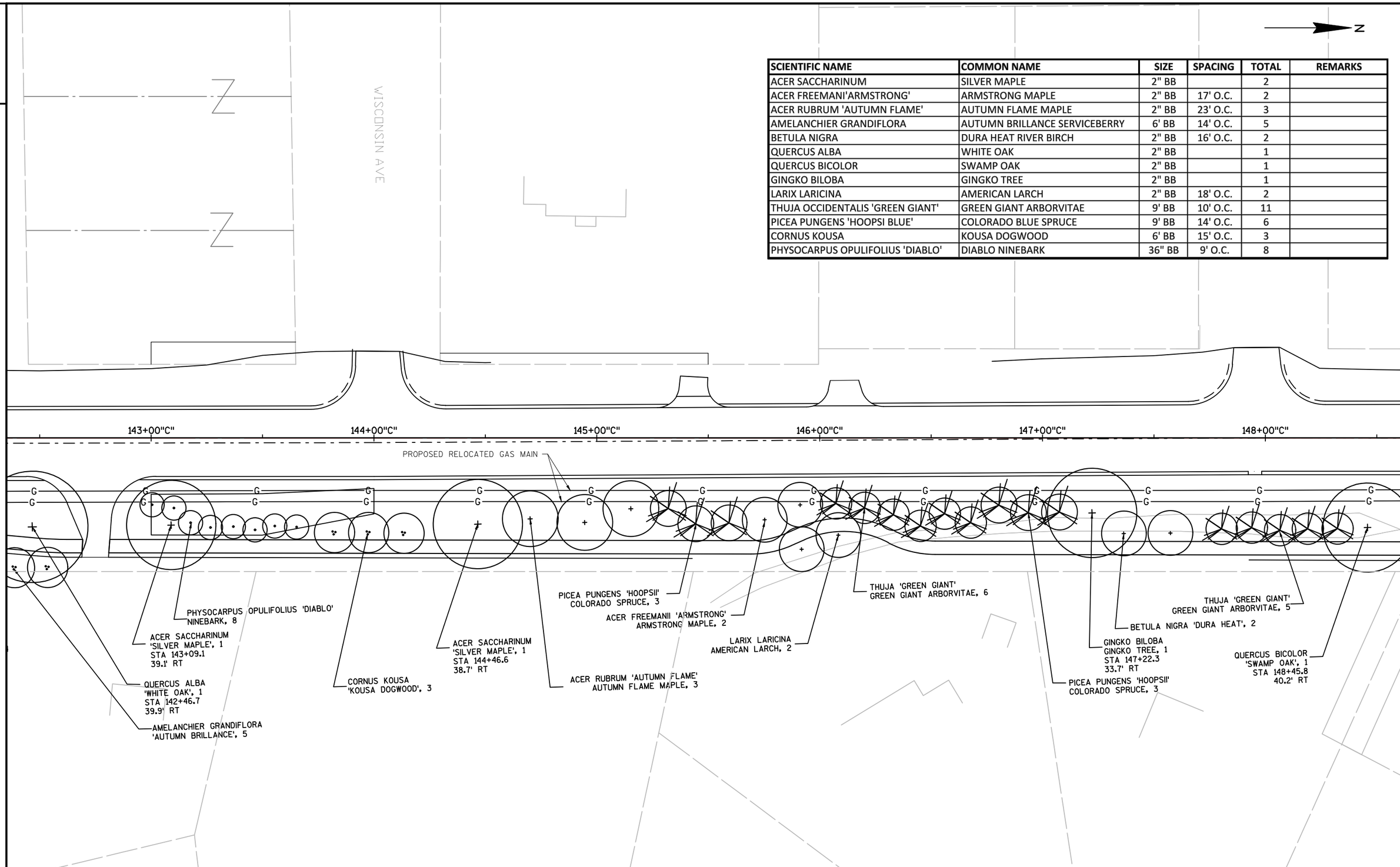

2

PROJECT NO:14-3775(11)	HWY:CTH "C"	COUNTY:WAUKESHA	LANDSCAPING PLAN	SHEET 53	E

FILE NAME : Y:\MILWAUKEE\20200S\20200.00\ENG_DOCS\BASE\20200_LAND.DWG
LAYOUT NAME - 20200_LAND03
PLOT DATE : 12/2/2015 9:16 AM PLOT BY : WATT, TIMOTHY PLOT NAME : PLOT SCALE : 1 IN:40 FT

2

PG 4

SCIENTIFIC NAME	COMMON NAME	SIZE	SPACING	TOTAL	REMARKS
POPULUS TREMULOIDES	QUAKING ASPEN	2" BB	17' O.C.	3	
QUERCUS ALBA	WHITE OAK	2" BB		1	
GINGKO BILOBA	GINGKO TREE	2" BB		1	
THUJA OCCIDENTALIS 'GREEN GIANT'	GREEN GIANT ARBORVITAE	9' BB	14' O.C.	3	
PICEA PUNGENS 'HOOPSI BLUE'	COLORADO BLUE SPRUCE	9' BB	14' O.C.	1	

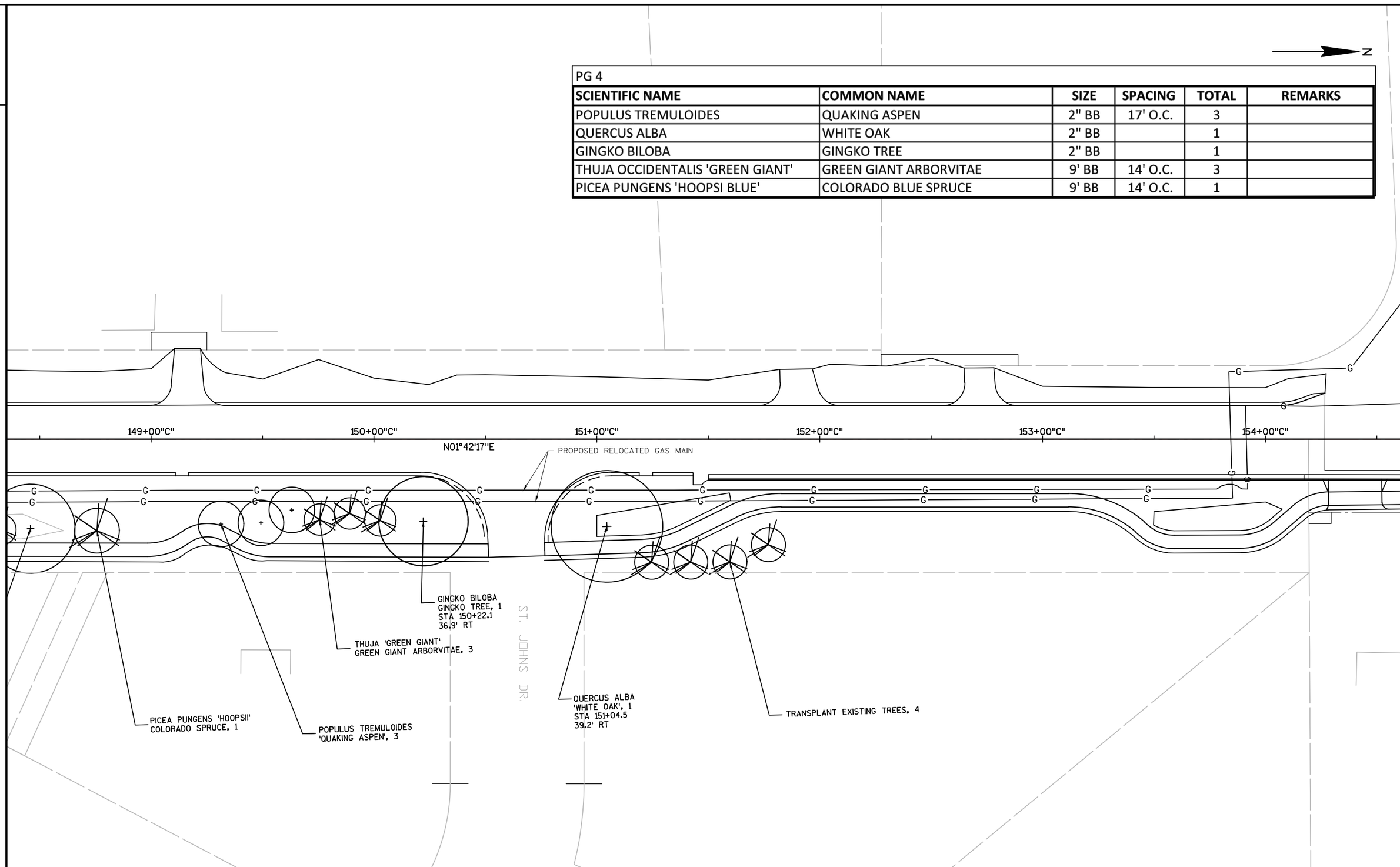

2

PROJECT NO:14-3775(11)	HWY:CTH "C"	COUNTY:WAUKESHA	LANDSCAPING PLAN	SHEET 54	E

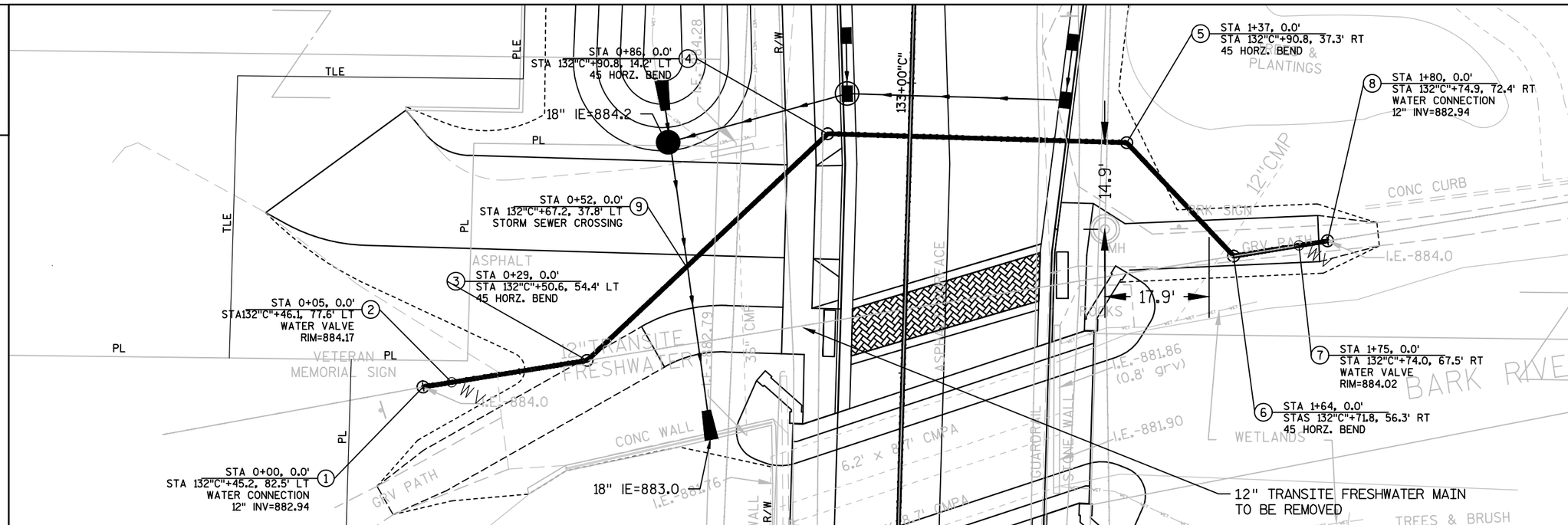

NOTE:
REMOVAL OF EXISTING FRESHWATER SUPPLY SYSTEM WITHIN THE WORK LIMITS TO BE COMPLETED BY A TRAINED ASBESTOS WORKER. REMOVAL AND DISPOSAL OF ASBESTOS CONTAINING MATERIAL SHALL BE INCIDENTAL TO SPV.0090.301 FRESHWATER SUPPLY RELAY.

N

SCALE: 1:20

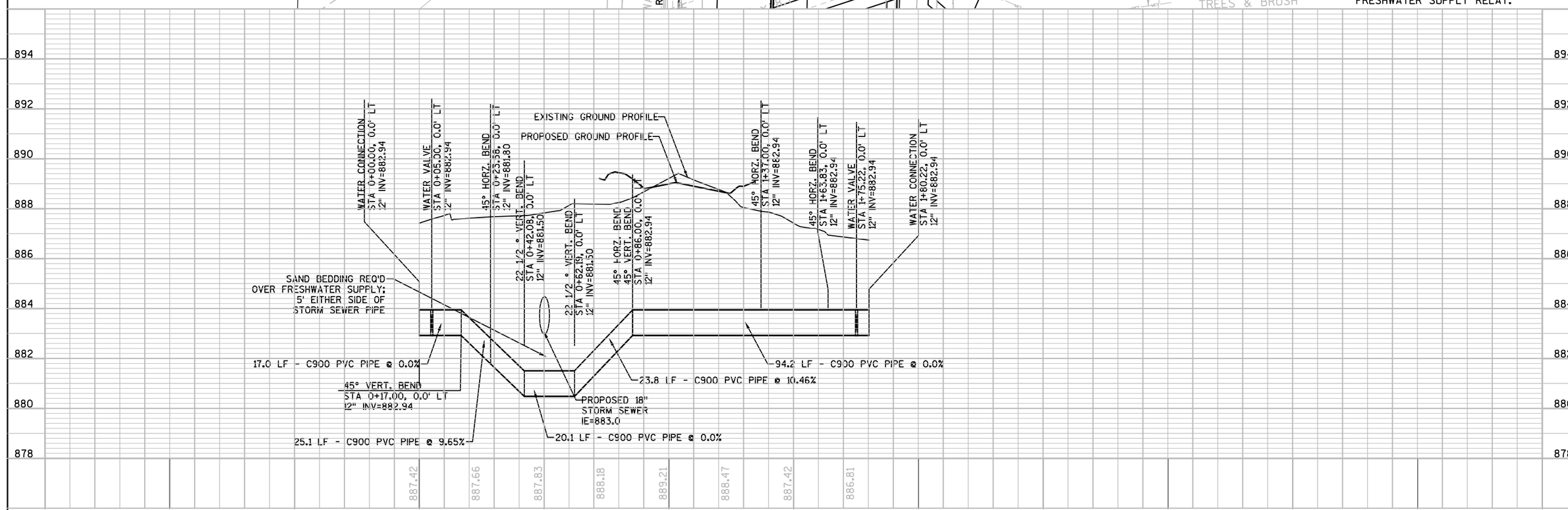

SCALE: 1:40

PROJECT NO:14-3775(11)	HWY:CTH "C"	COUNTY:WAUKESHA	FRESHWATER SUPPLY RELAY	SHEET 55	E

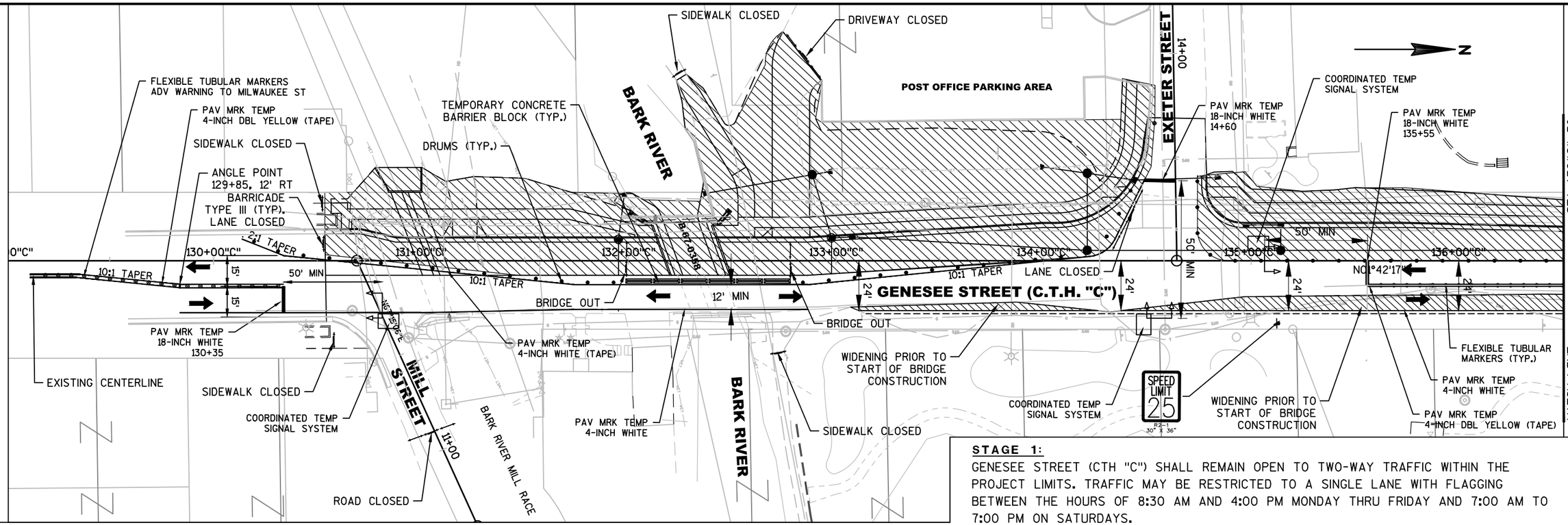

STAGE 1:

GENESEE STREET (CTH "C") SHALL REMAIN OPEN TO TWO-WAY TRAFFIC WITHIN THE PROJECT LIMITS. TRAFFIC MAY BE RESTRICTED TO A SINGLE LANE WITH FLAGGING BETWEEN THE HOURS OF 8:30 AM AND 4:00 PM MONDAY THRU FRIDAY AND 7:00 AM TO 7:00 PM ON SATURDAYS.

MAINTAIN TRAFFIC WITH A MINIMUM OF 11-FOOT TRAVEL LANES AT ALL TIMES WITH SIDE ROAD CLOSURES LIMITED TO ONE INTERSECTION AT A TIME.

- CONSTRUCT TEMPORAY WIDENING STA 133+10 TO 141+95 RT.
- INSTALL COORDINATED TEMPORARY SIGNAL SYSTEM.
- CONSTRUCT WEST SIDE OF B-67-0358 AND APPROACHES STA 130+50 TO 134+55. LT.
- CONSTRUCT WEST SIDE OF MILL RACE CULVERT AND ENDWALL STA 131+00 LT.
- CONSTRUCT STORM SEWER BETWEEN BARK RIVER AND ST. JOHNS ROAD.
- CONSTRUCT WEST SIDE OF CTH C FROM EXETER TO OAKWOOD DRIVE.

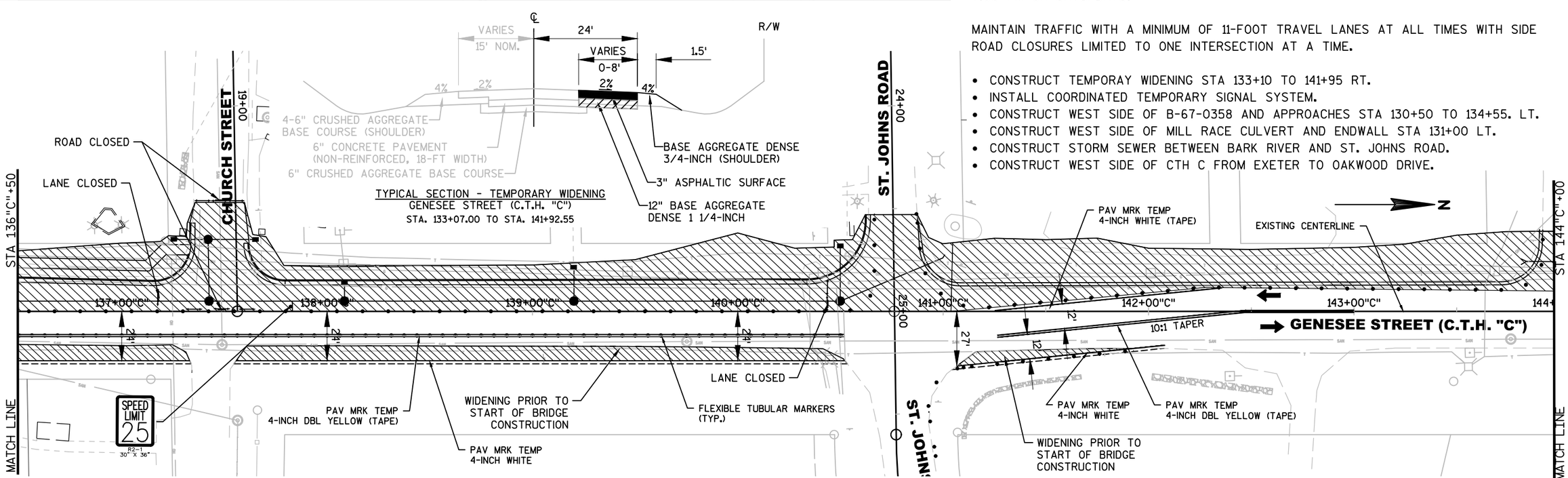

PROJECT NO:14-3775(11)	HWY: CTH "C"	COUNTY: WAUKESHA	STAGING DETAILS: STAGE 1	SHEET 56	E

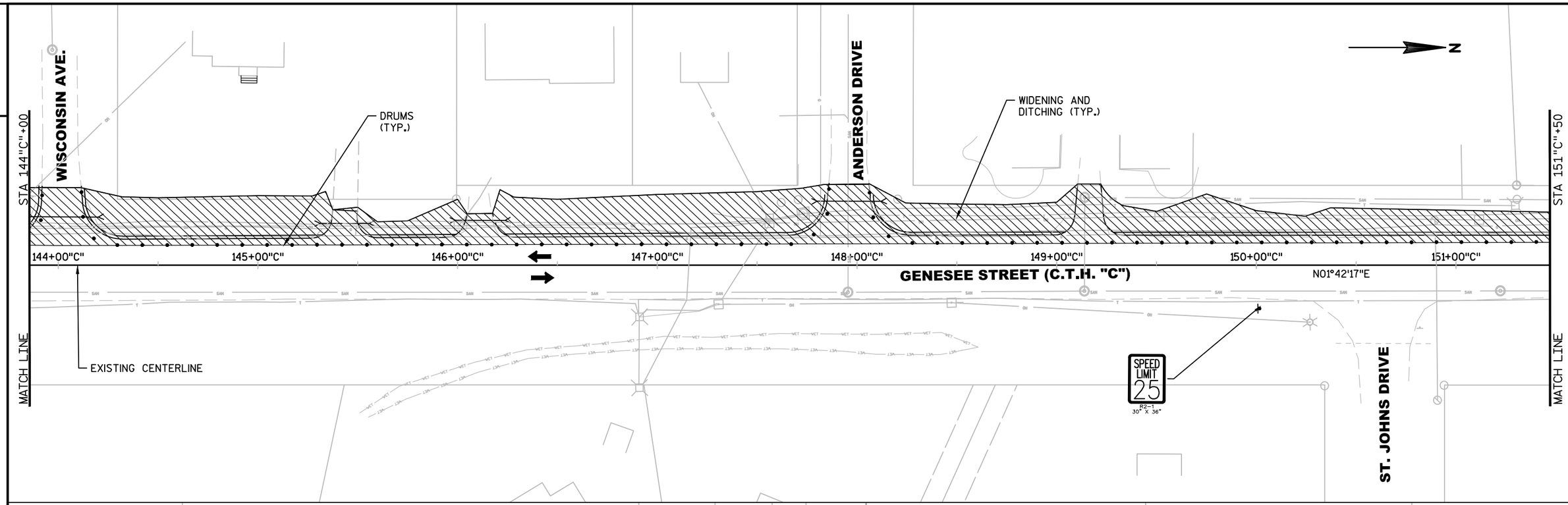
WISCONSIN AVE.
ANDERSON DRIVE
DRUMS (TYP.)
WIDENING AND DITCHING (TYP.)
STA 144"C"+00
STA 151"C"+50
144+00"C"
145+00"C"
146+00"C"
147+00"C"
148+00"C"
149+00"C"
150+00"C"
151+00"C"
GENESEE STREET (C.T.H. "C")
N01°42'17"E
EXISTING CENTERLINE
MATCH LINE
SPEED LIMIT 25
R2-1
30" X 36"
ST. JOHNS DRIVE
N

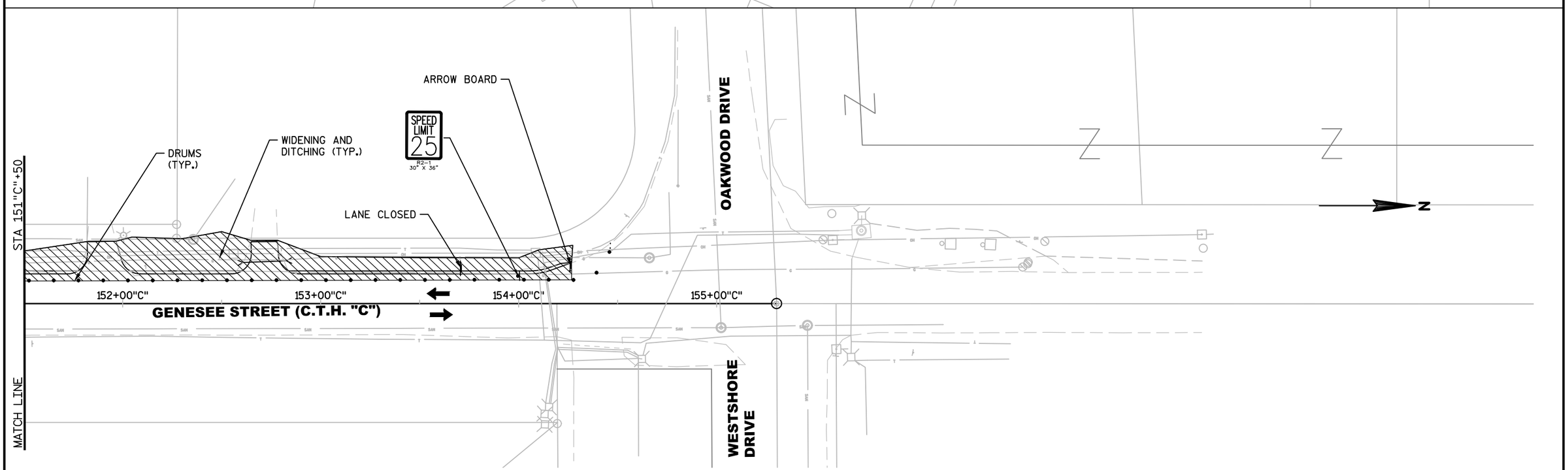
ARROW BOARD
SPEED LIMIT 25
R2-1
30" X 36"
DRUMS (TYP.)
WIDENING AND DITCHING (TYP.)
LANE CLOSED
OAKWOOD DRIVE
STA 151"C"+50
152+00"C"
153+00"C"
154+00"C"
155+00"C"
GENESEE STREET (C.T.H. "C")
MATCH LINE
WESTSHORE DRIVE
N

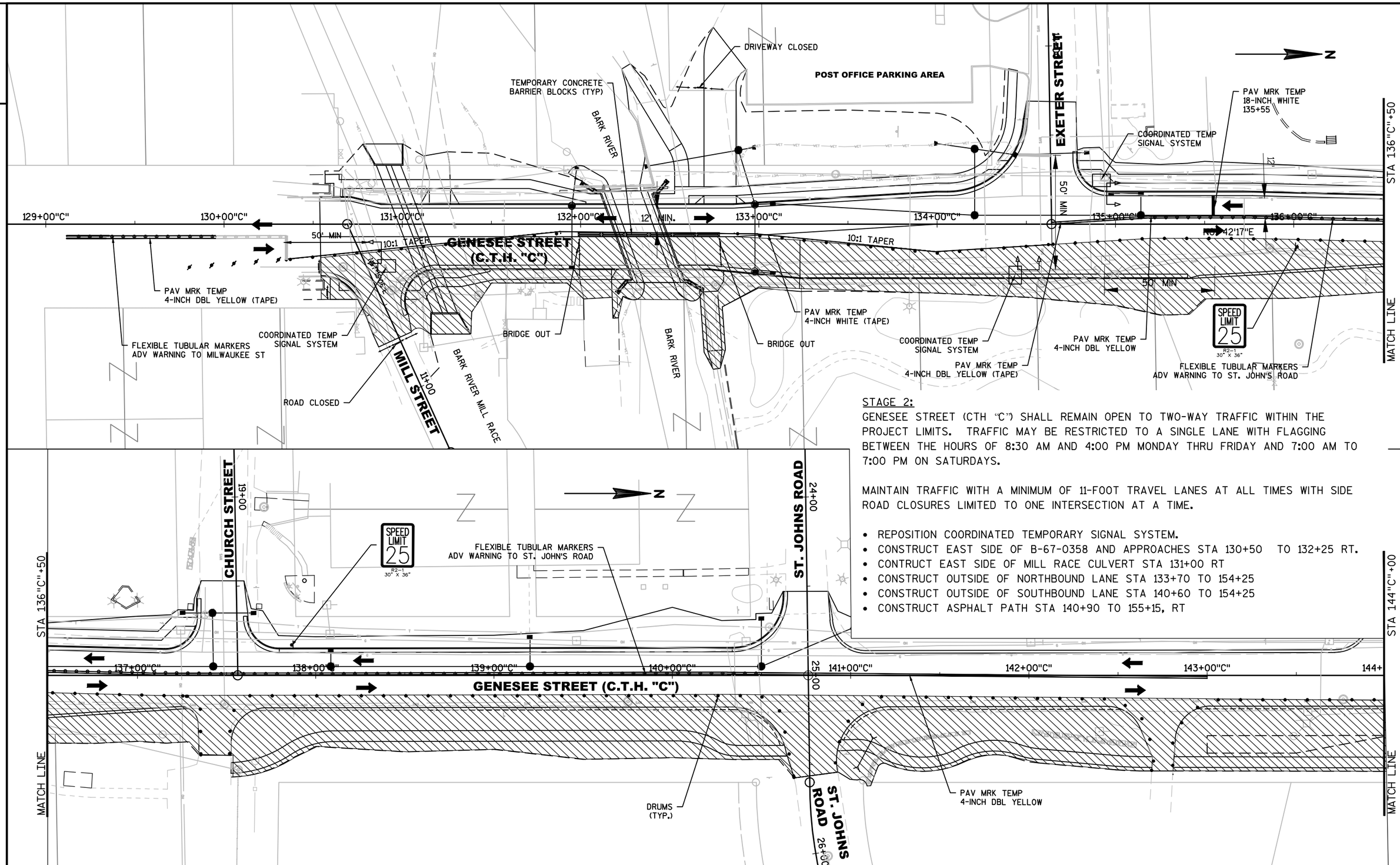

STAGE 2:

GENESEE STREET (CTH "C") SHALL REMAIN OPEN TO TWO-WAY TRAFFIC WITHIN THE PROJECT LIMITS. TRAFFIC MAY BE RESTRICTED TO A SINGLE LANE WITH FLAGGING BETWEEN THE HOURS OF 8:30 AM AND 4:00 PM MONDAY THRU FRIDAY AND 7:00 AM TO 7:00 PM ON SATURDAYS.

MAINTAIN TRAFFIC WITH A MINIMUM OF 11-FOOT TRAVEL LANES AT ALL TIMES WITH SIDE ROAD CLOSURES LIMITED TO ONE INTERSECTION AT A TIME.

- REPOSITION COORDINATED TEMPORARY SIGNAL SYSTEM.
- CONSTRUCT EAST SIDE OF B-67-0358 AND APPROACHES STA 130+50 TO 132+25 RT.
- CONTRUCT EAST SIDE OF MILL RACE CULVERT STA 131+00 RT
- CONSTRUCT OUTSIDE OF NORTHBOUND LANE STA 133+70 TO 154+25
- CONSTRUCT OUTSIDE OF SOUTHBOUND LANE STA 140+60 TO 154+25
- CONSTRUCT ASPHALT PATH STA 140+90 TO 155+15, RT

PROJECT NO:14-3775(11)	HWY:CTH "C"	COUNTY:WAUKESHA	STAGING DETAILS: STAGE 2	SHEET 58	E

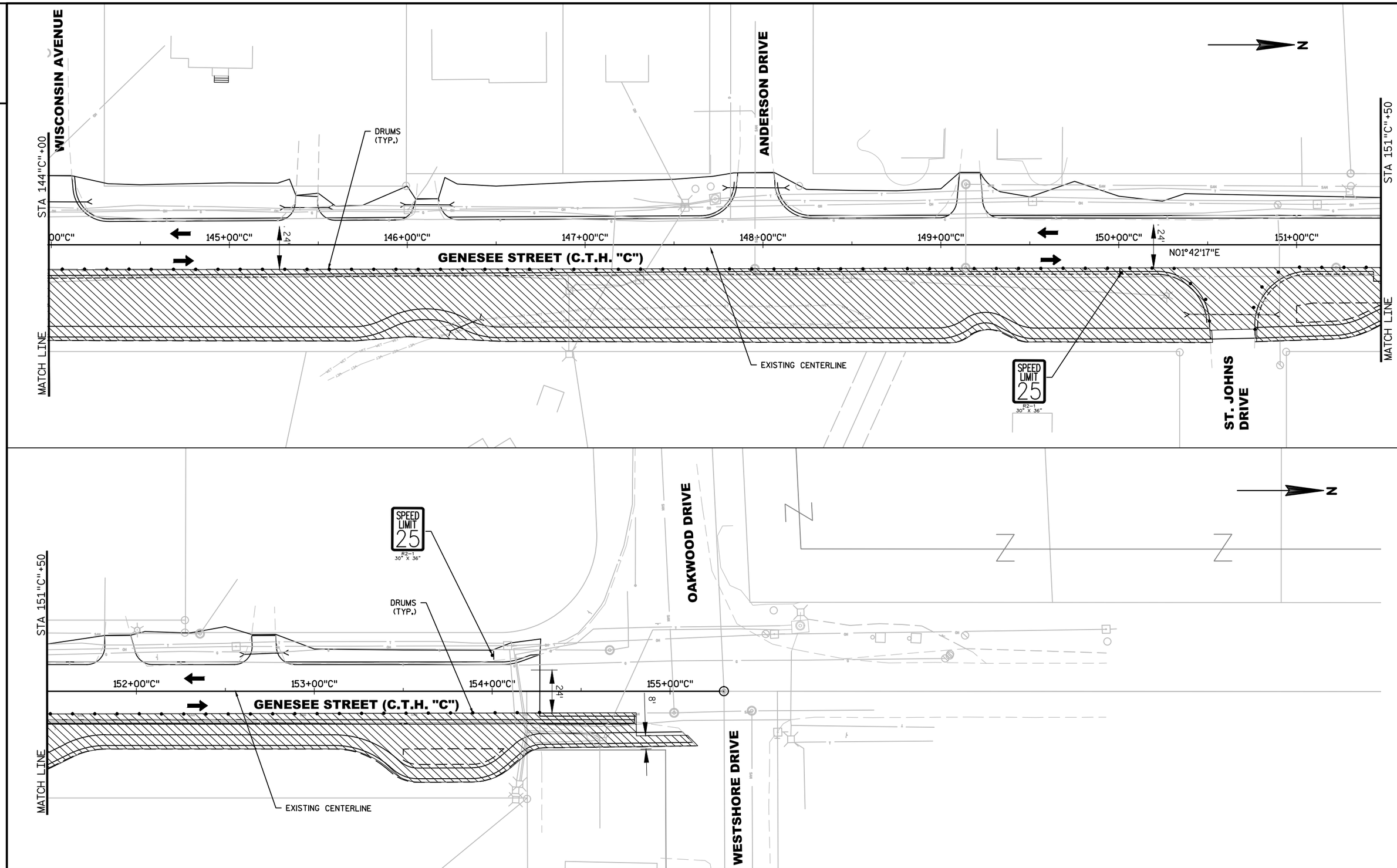

PROJECT NO:14-3775(11)	HWY:CTH "C"	COUNTY:WAUKESHA	STAGING DETAILS: STAGE 2	SHEET 59	E

2

STAGE 3:
GENESEE STREET (CTH "C") SHALL REMAIN OPEN TO THROUGH TRAFFIC WITHIN THE PROJECT LIMITS. TRAFFIC MAY BE RESTRICTED TO A SINGLE LANE WITH FLAGGING BETWEEN THE HOURS OF 8:30 AM AND 4:00 PM MONDAY THRU FRIDAY AND 7:00 AM TO 7:00 PM ON SATURDAYS.

MAINTAIN TRAFFIC WITH A MINIMUM OF 11-FOOT TRAVEL LANES AT ALL TIMES.

- CONSTRUCT CENTER ISLAND STA 134+80 TO 136+75
- PLACE ASHALT SURFACE

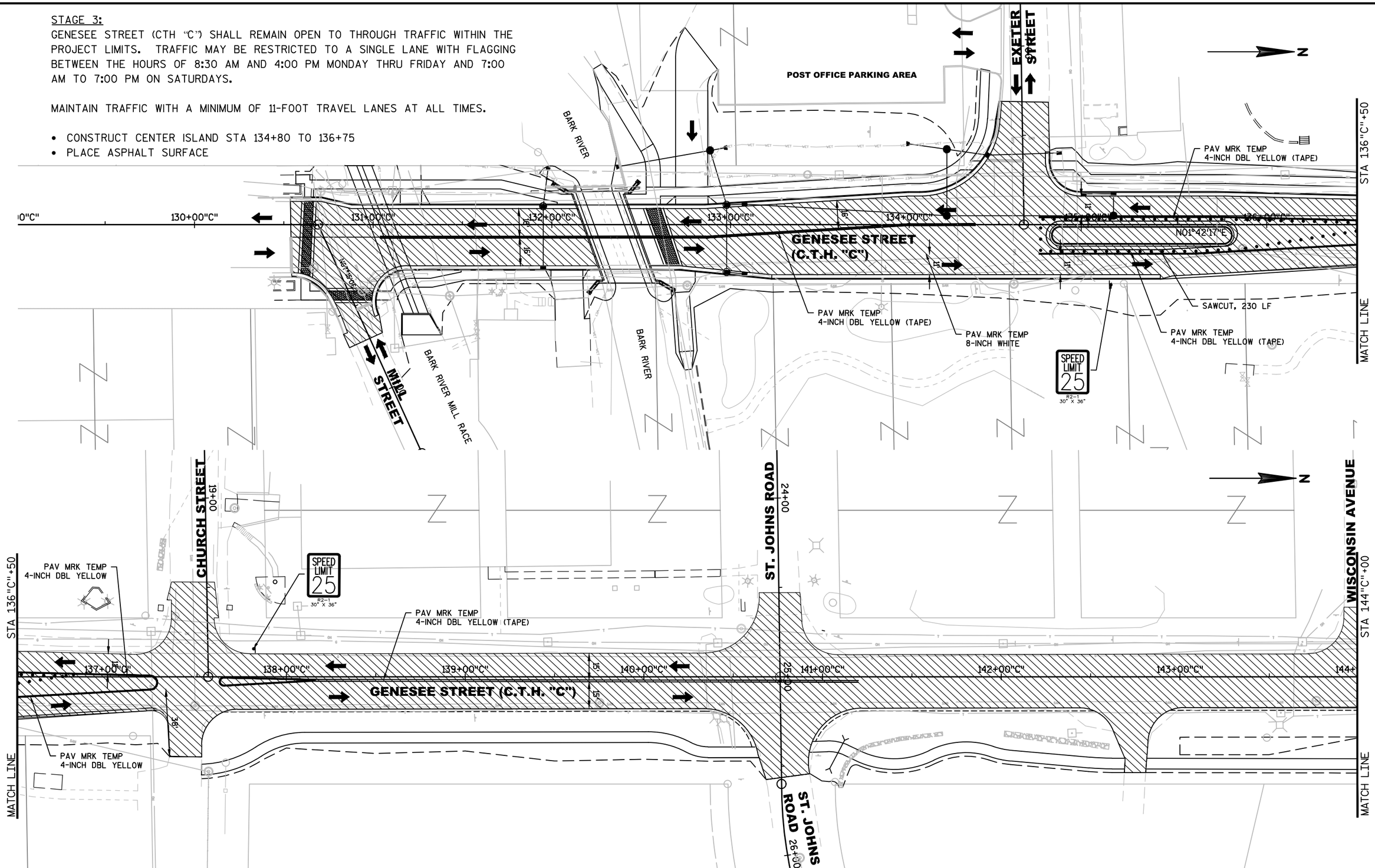

PROJECT NO:14-3775(11)	HWY:CTH "C"	COUNTY:WAUKESHA	STAGING DETAILS: STAGE 3	SHEET 60	E

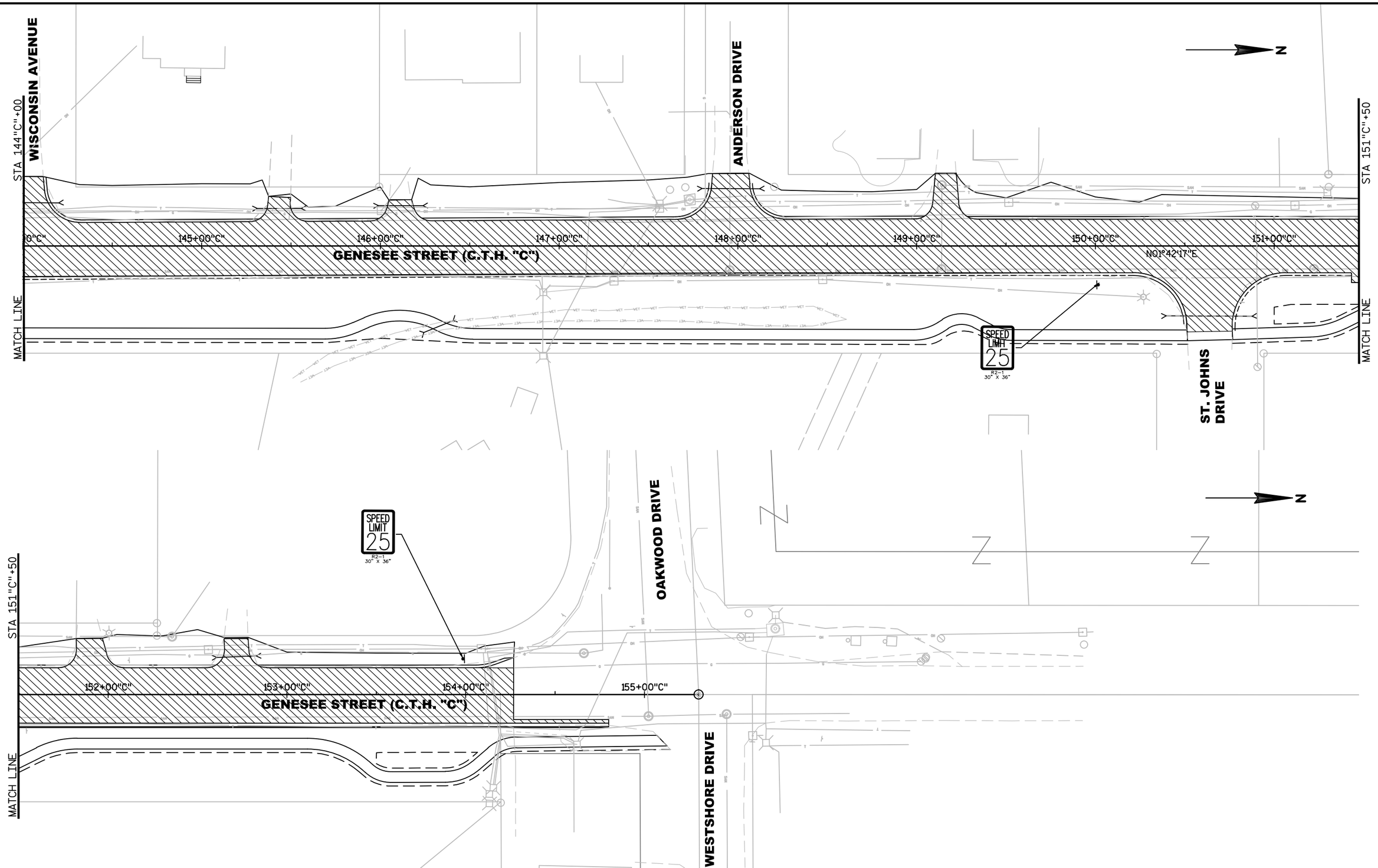

PROJECT NO:14-3775(11)	HWY:CTH "C"	COUNTY:WAUKESHA	STAGING DETAILS: STAGE 3	SHEET 61	E

FILE NAME : S:\CAD PROJECTS\409-14 CTH C\SHT\14-3775(11) SHEET STAGING 3.DWG
LAYOUT NAME - ****
PLOT DATE : 1/5/2016 4:55 PM PLOT BY : HMERSON PLOT NAME : PLOT SCALE : 1:50_XREF

2

CONSTRUCTION NOTES:

1. FINAL LOCATION OF PORTABLE SIGNAL SYSTEMS SHALL BE AS DIRECTED BY THE ENGINEER.
2. ADJUST TEMPORARY SIGNALS WITHIN EACH CONSTRUCTION STAGE AS DIRECTED BY THE ENGINEER TO MAINTAIN MUTCD SIGNAL REQUIREMENTS.

LEGEND

- PORTABLE TRAFFIC SIGNAL POLE (TRAILER MOUNTED)
- SIGNAL HEAD
- XX SIGNAL HEAD NUMBER
- R RED CIRCULAR INDICATOR
- Y YELLOW CIRCULAR INDICATOR
- G GREEN CIRCULAR INDICATOR
- 11 MICROWAVE DETECTION ZONE
- WORK AREA
- DIRECTION OF TRAFFIC
- BARRICADE
- TRAFFIC CONTROL DRUM
- MICROWAVE RADAR UNIT

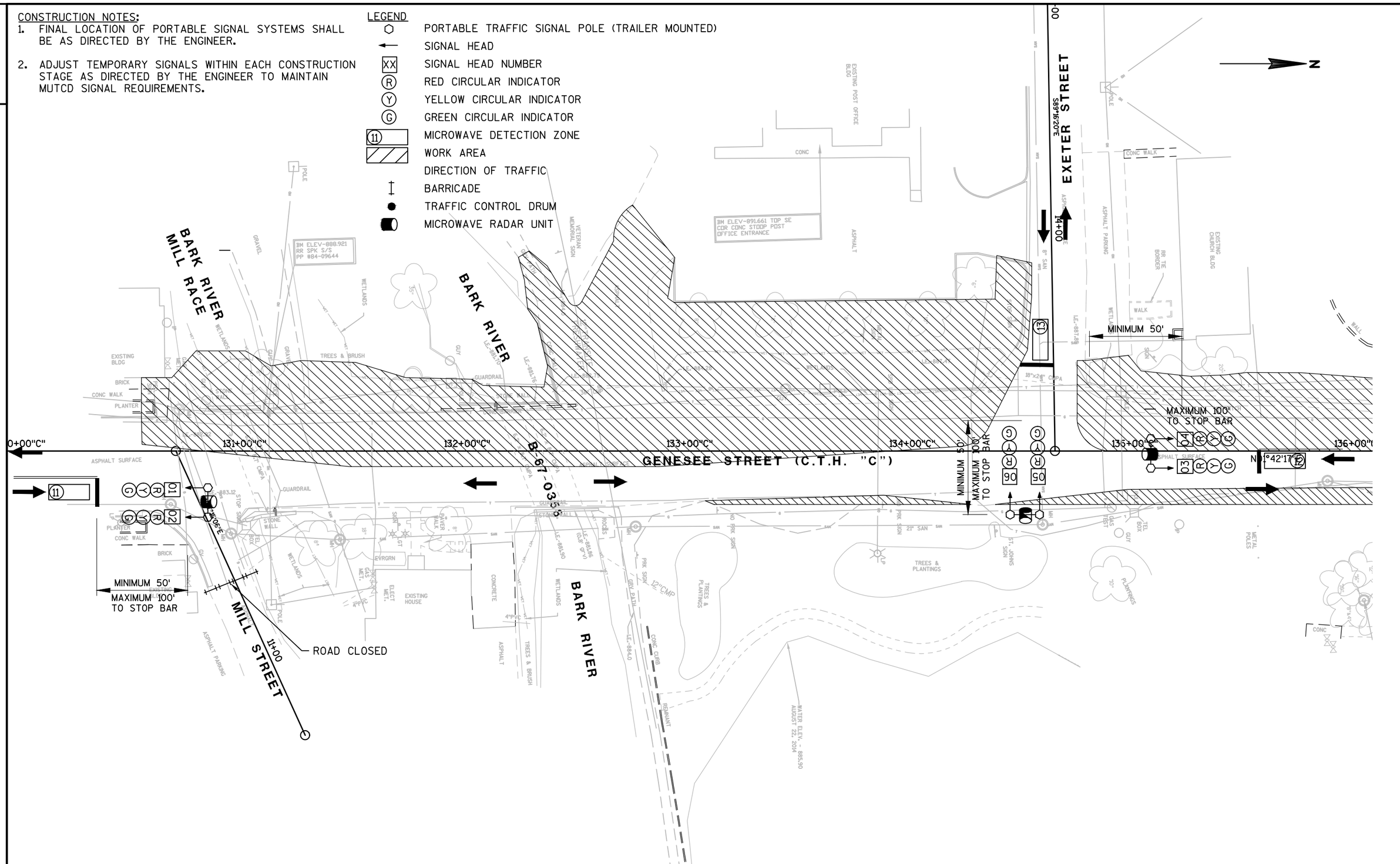

PROJECT NO: 14-3775(11)	HWY: CTH "C"	COUNTY: WAUKESHA	TEMPORARY SIGNAL - STAGE 1	SHEET 62	E

FILE NAME : S:\CAD PROJECTS\409-14 CTH C\SHT\14-3775(11) SHEET TEMP SIGNALS.DWG
LAYOUT NAME - ####
PLOT DATE : 12/23/2015 1:53 PM PLOT BY : HMERSON PLOT NAME : PLOT SCALE : 1:40_XREF

2

CONSTRUCTION NOTES:

1. FINAL LOCATION OF PORTABLE SIGNAL SYSTEMS SHALL BE AS DIRECTED BY THE ENGINEER.
2. ADJUST TEMPORARY SIGNALS WITHIN EACH CONSTRUCTION STAGE AS DIRECTED BY THE ENGINEER TO MAINTAIN MUTCD SIGNAL REQUIREMENTS.

LEGEND

- PORTABLE TRAFFIC SIGNAL POLE (TRAILER MOUNTED)
- SIGNAL HEAD
- XX SIGNAL HEAD NUMBER
- R RED CIRCULAR INDICATOR
- Y YELLOW CIRCULAR INDICATOR
- G GREEN CIRCULAR INDICATOR
- 11 MICROWAVE DETECTION ZONE
- WORK AREA
- DIRECTION OF TRAFFIC
- BARRICADE
- TRAFFIC CONTROL DRUM
- MICROWAVE RADAR UNIT

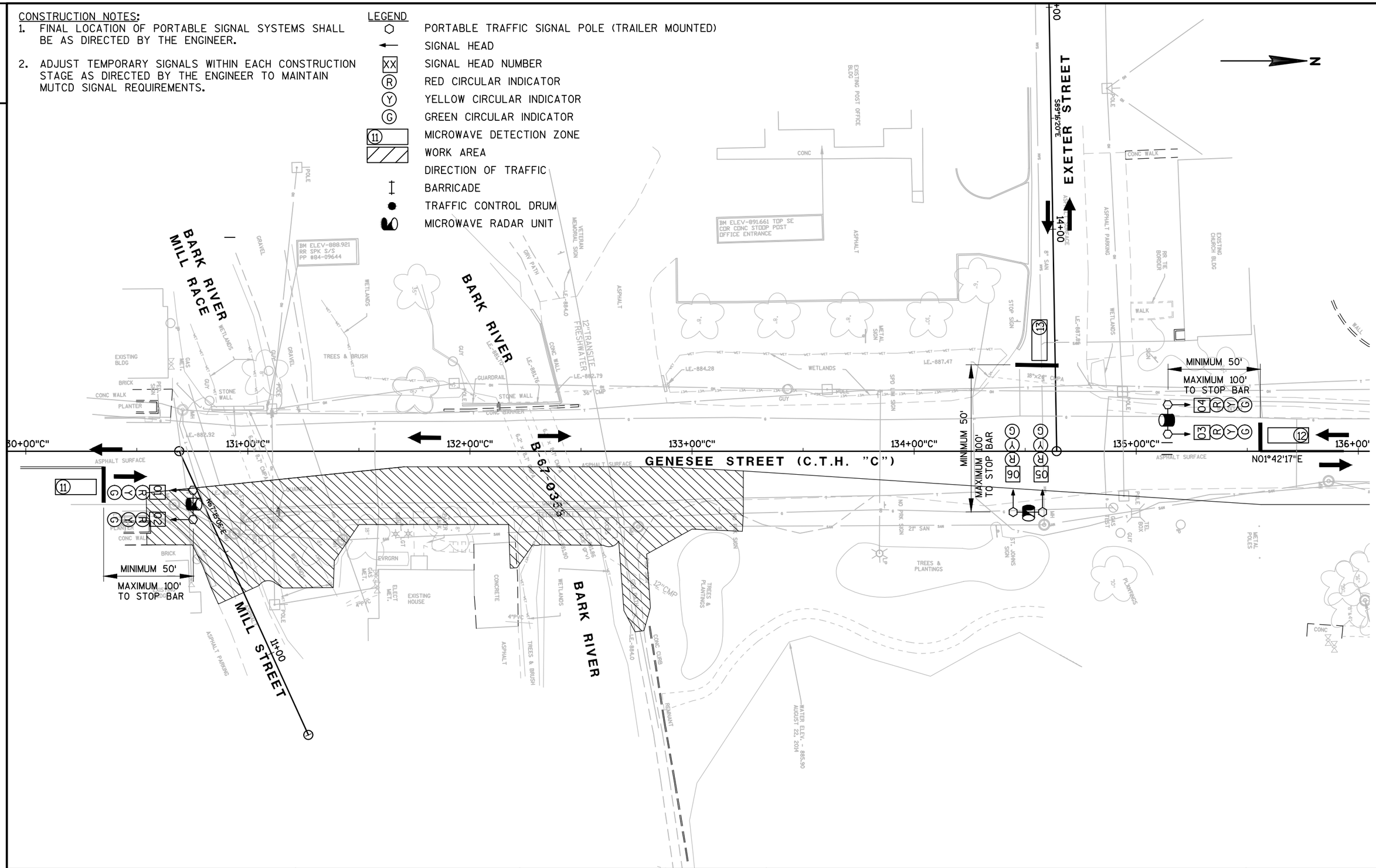

2

PROJECT NO: 14-3775(11)	HWY: CTH "C"	COUNTY: WAUKESHA	TEMPORARY SIGNAL - STAGE 2	SHEET 63	E

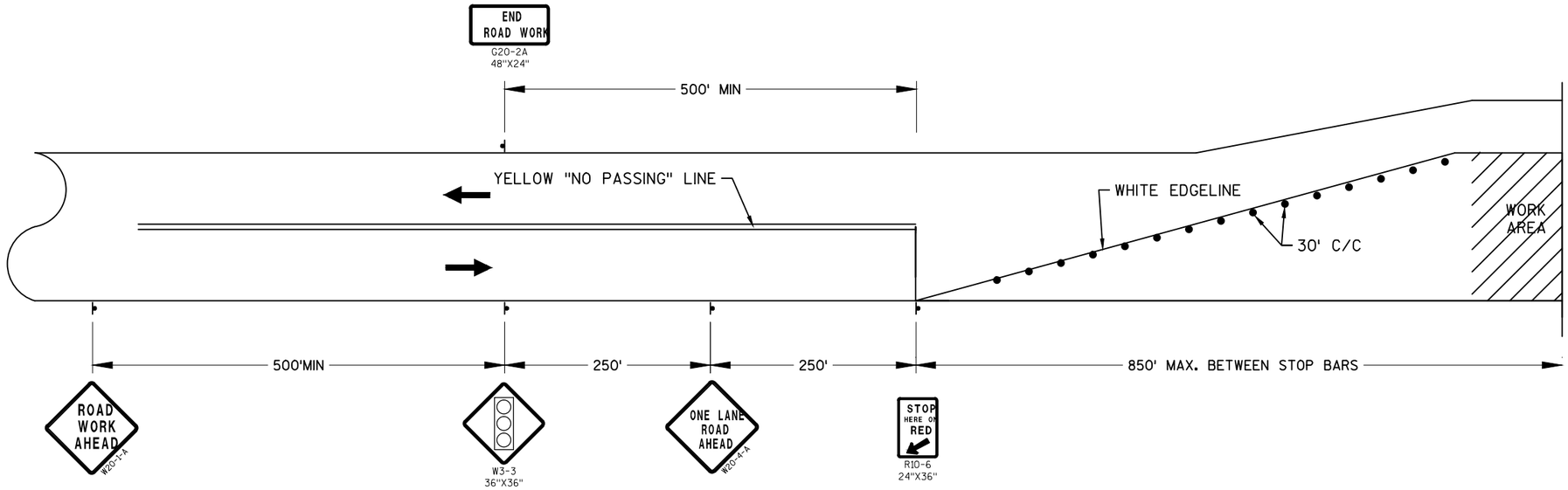
END ROAD WORK
G20-2A
48"X24"
500' MIN
YELLOW "NO PASSING" LINE
WHITE EDGELINE
30' C/C
WORK AREA
500'MIN
250'
250'
850' MAX. BETWEEN STOP BARS
ROAD WORK AHEAD
W20-1-A
W3-3
36"X36"
ONE LANE ROAD AHEAD
W20-4-A
STOP HERE ON RED
R10-6
24"X36"

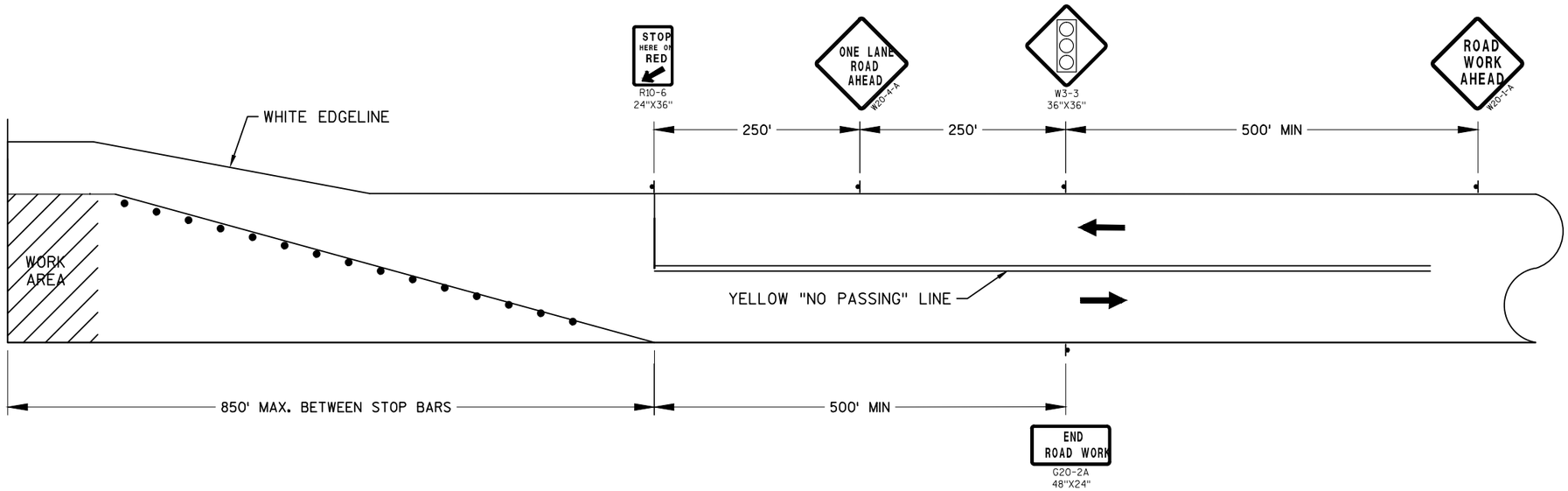
STOP HERE ON RED
R10-6
24"X36"
ONE LANE ROAD AHEAD
W20-4-A
W3-3
36"X36"
ROAD WORK AHEAD
W20-1-A
WHITE EDGELINE
250'
250'
500' MIN
WORK AREA
YELLOW "NO PASSING" LINE
850' MAX. BETWEEN STOP BARS
500' MIN
END ROAD WORK
G20-2A
48"X24"

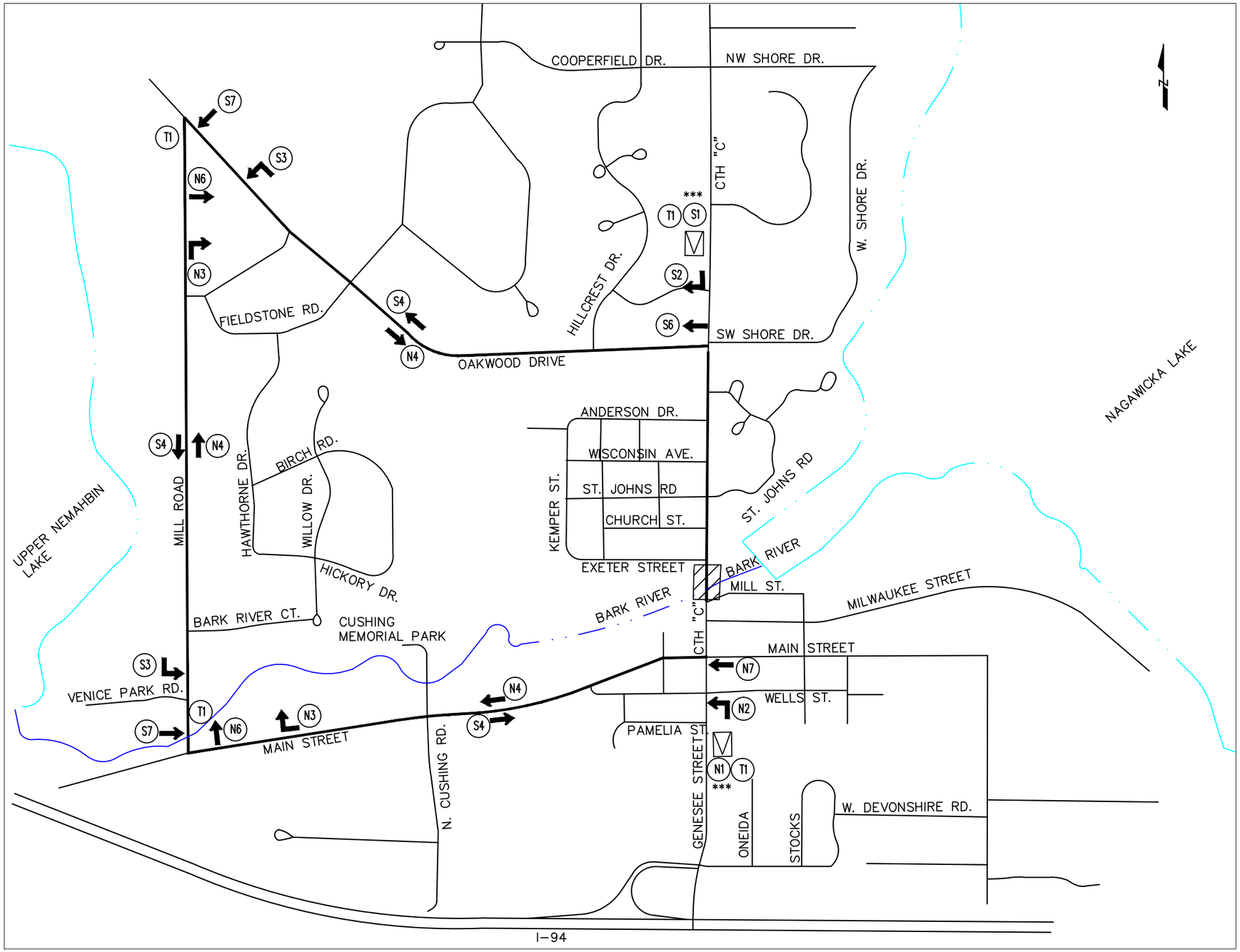

ALTERNATE ROUTE PLAN NOTES:

ALL EXISTING SIGN MESSAGES THAT CONFLICT WITH TRAFFIC CONTROL SIGNS SHALL BE COVERED OR REMOVED.

THE EXACT NUMBER, LOCATION, AND SPACING OF ALL SIGNS AND DEVICES SHALL BE ADJUSTED TO FIT FIELD CONDITIONS AS APPROVED BY THE ENGINEER.

PORTABLE CHANGEABLE MESSAGE SIGN SHALL BE INSTALLED NOT LESS THAN TWO WEEKS IN ADVANCE OF CONSTRUCTION OPERATIONS COMMENCING.

LEGEND

PORTABLE CHANGEABLE MESSAGE SIGN

(1) SIGN GROUP NUMBER

PORTABLE CHANGEABLE MESSAGE COPY PRIOR TO CONSTRUCTION:

MESSAGE (N1) (S1)

GENESEE ST
1-LANE @
BARK RIVER
BEGINS
TBA

USE ALT ROUTE
10 TON LIMIT

***PLACE TRAFFIC CONTROL ADVANCE WARNING SIGNS IN ACCORDANCE WITH SDD 15C5-3 OR AS DIRECTED BY THE ENGINEER.

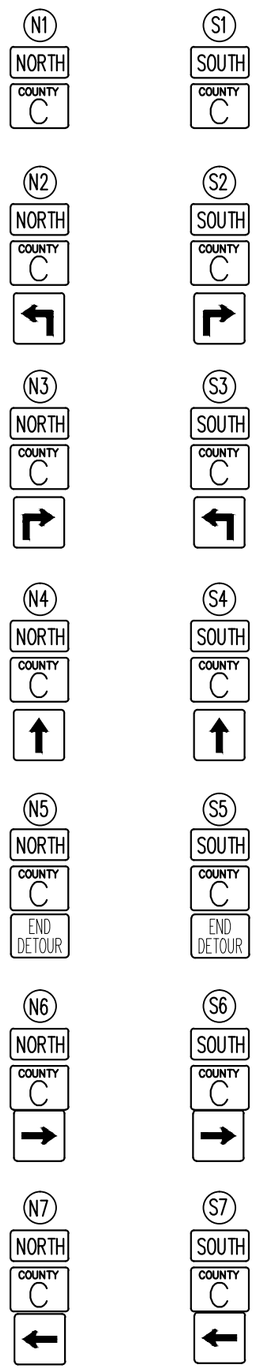

R12-1
24" X 30"

DETOUR SIGNAGE NOTES:

ALL M3 SERIES SIGNS WHICH ARE PART OF THE DETOUR ROUTE MARKER SIGNING ASSEMBLY OR ATTACHED TO ANY WARNING SIGN SHALL BE BLACK LETTERING ON A WHITE BACKGROUND.

ALL SIGN CLUSTERS TO INCLUDE M4-8 "DETOUR" SIGN AT THE TOP OF THE SIGN GROUP.

M4-1A 24"X12" | M3-3 24" X 12" | M3-1 24" X 12" | M1-6 24" X 24" | M_5-1L 21" X 21" | M_5-1R 21" X 21" | M_6-1 21" X 21"

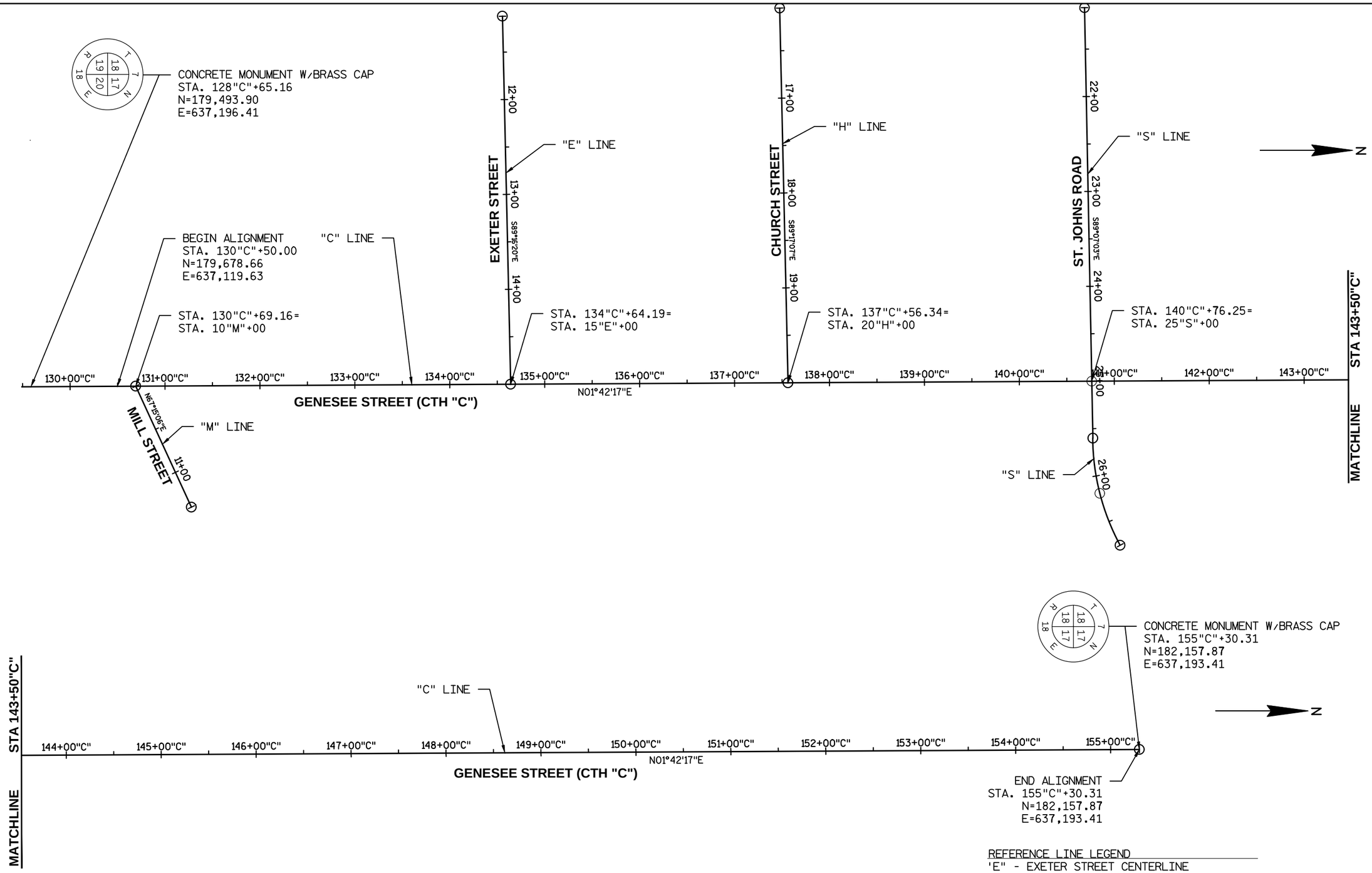

REFERENCE LINE LEGEND

'E" - EXETER STREET CENTERLINE
"C" - GENESEE STREET (CTH "C)-CENTERLINE
"H" - CHURCH STREET CENTERLINE
"M" - MILL STREET CENTERLINE
"S" - ST. JOHNS ROAD CENTERLINE

PROJECT NO: 14-3775 (11)	HWY: C.T.H. "C"	COUNTY: WAUKESHA	ALIGNMENT PLAN	SHEET 67	E

3

EARTHWORK SUMMARY

205.0100, 208.0100

From/ To Station	Location	Common Excavation (1)		Salvaged/ Unusable Pavement Material (2)	Available Material	Waste	Comment:
		Cut (2)	EBS Excavation (3)				
		(205.0100)					
135+54.5 TO 151+26.8	C.T.H. "C"	740	200		740	740	CATEGORY 0010
135+54.5 TO 151+26.8	PATH	2850	---	0	2850	1102	CATEGORY 0070
BRIDGE	Undistributed	---	---	0	0	450	CATEGORY 0020
MILL RACE	Undistributed	300	---	0	0	300	CATEGORY 0040
Grand Total		3890	200	0	3590	2592	

1) Common Excavation is the sum of the Cut and EBS Excavation columns. Item number 205.0100
2) Salvaged/ Unsuable Pavement Material is included in Cut.
3) Excavation Below Subgrade is undistributed quantity only.

3

* COMBINED QUANTITY, ADDITIONAL QUANTITIES FOUND ELSEWHERE IN PLANS.

3

CLEARING AND GRUBBING

LOCATION	201.0105 CLEARING STA	201.0205 GRUBBING STA
130"C"+00 TO 155"C"00	25	25
	25	25

CHIPPING FOR EROSION CONTROL

LOCATION	SPV.0170.102 LF
STA 137"C"+00 TO STA 150"C"00	13
UNDISTRIBUTED	5
	18

LATE SEASON TURF RESTORATION

LOCATION	630.0200 SEEDING TEMPORARY* LB	629.0205 FERTILIZER TYPE A* CWT	627.0200 MULCH SY
UNDISTRIBUTED	14	0.3	500
	14	0.3	500

3

TREE REMOVAL SUMMARY BY GRADE

LOCATION	WEST UNKNOWN (ID)	EAST GOOD (ID)	EAST FAIR (ID)	EAST POOR (ID)	EAST DEAD (ID)	EAST UNKNOWN (ID)
MILL STREET - EXETER STREET	56	--	--	--	--	34
EXETER STREET - CHURCH STREET	20	--	--	--	--	28
CHURCH STREET - ST. JOHNS ROAD	0	4	182	156	64	--
ST. JOHNS ROAD - WISCONSIN AVENUE	61	0	109	168	46	--
WISCONSIN AVENUE - ANDERSON DRIVE	60	13	220	255	34	--
ANDERSON DRIVE - ST. JOHNS DRIVE	0	38	45	95	10	--
ST. JOHNS DRIVE -OAKWOOD DRIVE	0	44	10	29	30	--
	197	99	566	703	184	62

*NOTES:

1. TREE REMOVAL BY GRADE (> 4 ID)
2. ID COUNT DOES NOT INCLUDE DEAD, BOX ELDER OR ASH TREES NOTED BY FORESTER TO NOT BE MITIGATED.
3. ID FROM CITY FORESTER USED FOR EAST SIDE COMPUTATIONS.

EROSION CONTROL

LOCATION	628.7504 TEMPORARY DITCH CHECKS* LF	628.7555 CULVERT PIPE CHECKS* EA
130"C"+65 TO 154"C"65	22	4
UNDISTRIBUTED	---	---
	22	4

STREETSCAPING

LOCATION	SPV.0090.601 CROSSWALK CONCRETRE BANDS LF	SPV.0165.601 PAVER CROSSWALK SF
PROJECT 14-3775 (11)	199	794
	199	794

LANDSCAPING

LOCATION	632.9101 LANDSCAPE MAINTENANCE AND CARE CYCLES EA	SPV.0035.601 EXCAVATION FOR PLANT BEDS CY	SPV.0035.602 BACKFILL FOR PLANT BEDS CY	SPV.0060.601 TRANSPLANT TREES EA	SPV.0085.601 NO MOW SEEDING LB	SPV.0090.602 TREE PROTECTION LF	SPV.0090.603 ROOT PRUNING LF	SPV.0120.601 LANDSCAPE WATERING MGAL
PROJECT (14-3775(11))	16	700	700	6	62	1500	400	30
	16	700	700	6	62	1500	400	30

* COMBINED QUANTITY, ADDITIONAL QUANTITIES FOUND ELSEWHERE IN PLANS.

3

REMOVING SMALL PIPE CULVERTS

STATION	SIZE	LENGTH	TYPE	203.0100 EACH	COMMENT
131"C"+01 LT	6.2'X8.7'	53	CMPA	1	MILL RACE
132"C"+63 LT	36"	51	CMP	1	USPS DRIVEWAY
134"C"+57 LT	18"X24"	47	CMPA	1	EXETER STREET
137"C"+47 LT	24"	40	CMP	1	CHURCH STREET
140"C"+75 LT	12"X18"	35	CMPA	1	ST. JOHN'S ROAD
150"C"+ 64 RT	20"X28"	47	CMPA	1	ST. JOHN'S DRIVE
152"C"+72 LT	15"	22	CMP	1	1441 GENESEE STREET
154"C"+40 RT	15"	34	CMP	1	1452 GENESEE STREET
			TOTAL	8	

REMOVING CURB AND GUTTER

STATION TO STATION	LOCATION	204.1050 LF
130"C"+54 TO 130"C"+65	LT	12
130"C"+54 TO 130"C"+86	RT	50
134"C"+47 TO 134"C"+52	LT	24
134"C"+43	LT	7
	TOTAL	93

REMOVING GUARDRAIL

STATION TO STATION	LOCATION	204.0165 LF
130"C"+80 TO 131"C"+09	LT	31
130"C"+99 TO 131"C"+30	RT	35
131"C"+97 TO 132"C"+50	LT	52
132"C"+22 TO 132"C"+68	RT	46
	TOTAL	164

GEOTEXTILE FABRIC TYPE SR (MIRAFI BX-1000)

STA	645.0135 SY	COMMENT
UNDISTRIBUTED	165	EBS
TOTAL	165	

SAWING CONCRETE

STATION	690.0250 LF	COMMENT
130"C"+53 LT	3	CURB & GUTTER
130"C"+53 RT	3	CURB & GUTTER
132"C"+11 RT	31	DRIVEWAY
134+43 LT	5	CURB & GUTTER
TOTAL	42	

* COMBINED QUANTITY, ADDITIONAL QUANTITIES FOUND ELSEWHERE IN PLANS.

LOCATION	611.8120.S COVER PLATES TEMPORARY EA
UNDISTRIBUTED	20
TOTAL	20

LOCATION	SPV.0060.102 MOVING MAILBOXES EA
STA 145+00 TO 153+00 LT	4
TOTAL	4

LOCATION	SPV.0060.103 UTILITY LOCATE EA
UNDISTRIBUTED	10
TOTAL	10

LOCATION	616.0700.S FENCE SAFETY LF
UNDISTRIBUTED	590
TOTAL	590

*SEE CLEARING & GRUBBING PLAN FOR LOCATIONS

SAWING ASPHALT

STATION	690.0150 LF	COMMENT
130"C"+54.0	40	BOP
130"C"+98.0	20	MILL STREET
132"C"+84.0 LT	30	USPS DRIVEWAY
134"C"+63.0	26	EXETER STREET
137"C"+47.7 LT	24	CHURCH STREET
137"C"+43.6 RT	18	PARK ENTRANCE
140"C"+76.0 LT	21	ST. JOHNS ROAD
140"C"+80.7 RT	25	ST. JOHNS ROAD
142"C"+74.0 RT	15	DRIVEWAY
144"C"+02.0 LT	20	WISCONSIN AVENUE
146"C"+11.0 LT	15	DRIVEWAY
147"C"+95.0	20	ANDERSON DRIVE
149"C"+16.0 LT	12	DRIVEWAY
150"C"+64.0	26	ST. JOHNS DRIVE
151"C"+89.0 LT	15	DRIVEWAY
152"C"+72.0 LT	15	DRIVEWAY
154"C"+27.0	28	EOP
154"C"+26.7 TO 154"C"+65 LT	90	CURB & GUTTER
TOTAL	460	

CONCRETE CURB & GUTTER

STA TO STA	601.0407 CURB & GUTTER 18-INCH TYPE D LF	601.0411 CURB & GUTTER 30-INCH TYPE D LF
130"C"+54.5 TO 134"C"+51.7 LT	---	432
130"C"+54.4 TO 130"C"+82.0 RT	---	39
131"C"+01.0 TO 135"C"+40.4 RT	---	462
134"C"+78.5 TO 135"C"+81.6	220	---
134"C"+76.1 TO 137"C"+35.7 LT	---	298
137"C"+59.6 TO 140"C"+64.6 LT	---	337
151"C"+50.0 TO 154"C"+80 RT	---	330
132"C"+52.7 LT	---	---
134"C"+21.7 LT	---	---
TOTAL	220	1898

BASE AGGREGATE DENCE 3/4-INCH

ITEM 305.0110

LOCATION	TONS	NOTES
ROADWAY		
STA 135"C"+44.5 TO 151"C"+43.2 RT	150	SHOULDER
STA 140"C"+88.8 TO 154"C"+26.8 LT	130	SHOULDER
SIDEWALK		
STA 130"C"+59.6 TO 132"C"+71.4 RT	55	SIDEWALK
STA 130"C"+56.8 TO 137"C"+33.1 LT	165	SIDEWALK
TOTAL	500	

BASE AGGREGATE DENCE 1 1/4-INCH

ITEM 305.0120

LOCATION	TONS	NOTES
ROADWAY		
STA 130"C"+54.5 TO 154"C"+26.8	240	ROADWAY
STA 135"C"+81.6 TO 154"C"+26.8	2480	WIDENING
STA 137"C"+52 TO 155"C"+06.88 RT	525	PATH
TEMP. WIDENING	445	
DRIVEWAYS	135	
TOTAL	3825	

BASE AGGREGATE DENSE 3-INCH

305.0130

LOCATION	TONS	NOTES
UNDISTRIBUTED	125	EBS
TOTAL	125	

CURB RAMP DETECTABLE WARNING FIELD YELLOW

STATION	LOCATION	602.0505 SF
STA 130"C"+62	LT	8
STA 130"C"+62	RT	8
STA 130"C"+72	RT	8
STA 131"C"+03	RT	8
STA 132"C"+57	LT	16
STA 132"C"+69	RT	16
STA 134"C"+36	LT	8
STA 134"C"+79	LT	8
STA 137"C"+32	LT	8
STA 134"C"+43	LT	8
TOTAL		96

3

3

CONCRETE SIDEWALK

LOCATION	602.0405 CONCRETE SIDEWALK 4-INCH SF	602.0415 CONCRETE SIDEWALK 6-INCH SF
130"C"+56.8 TO 131"C"+15.2 LT	342	---
130"C"+59.6 TO 130"C"+75.0 RT	100	---
131"C"+01.8 TO 131"C"+96.5 RT	514	---
131"C"+15.2 TO 131"C"+27.0 LT	---	59
131"C"+96.5 TO 132"C"+28.5 RT	---	172
131"C"+27.0 TO 132"C"+13.0 LT	435	---
132"C"+40.7 TO 132"C"+69.3 LT	362	---
132"C"+56.2 TO 132"C"+80.2 RT	225	---
132"C"+69.3 TO 132"C"+87.2 LT	---	91
132"C"+87.2 TO 134"C"+45.0 LT	1032	---
134"C"+78.8 TO 137"C"+33.1 LT	1302	---
TOTAL	4312	322

CONCRETE DRIVEWAY

LOCATION	416.0160 6-INCH SY
131"C"+21 LT	17
132"C"+78 LT	11
154"C"+40 RT	15
TOTAL	43

CONCRETE APPROACH SLAB

LOCATION	415.0410 SY
South Approach	48
North Approach	65
TOTAL	113

* COMBINED QUANTITY, ADDITIONAL QUANTITIES FOUND ELSEWHERE IN PLANS.

PROOF ROLLING

LOCATION	SPV.0170.101 STA
PROJECT (14-3775(11))	16
	16

FINISHING ROADWAY

LOCATION	213.0100 EACH
PROJECT	1
TOTAL	1

MOBILIZATION

LOCATION	619.1000 EACH
PROJECT	1
TOTAL	1

FIELD OFFICE TYPE B

LOCATION	642.5001 EACH
PROJECT (14-3775(11))	1
TOTAL	1

ASPHALTIC ITEMS

LOCATION	460.1100 HMA PAVEMENT TYPE C-1 TON	455.0605 TACK COAT (0.07 gal/ SY) GAL	455.0105 ASPHALTIC MATERIAL PG58-28 TON	465.0105 ASPHALTIC SURFACE TON	465.0120 ASPHALT SURFACE DRIVEWAYS & FIELD ENTRANCES TON
ROADWAY					
STA 130"C"+54.5 to 154"C"+26.8	3095	655	185	---	---
*BRIDGE & APPROACHES NOT INCLUDED					
PATH - STA 137"C"+52 TO 155"C"+06.88 RT	---	---	---	265	---
DRIVEWAYS	---	---	---	---	65
TEMPORARY WIDENING STAGE 1	---	---	---	115	---
TOTAL	3095	655	185	380	65

ASPHALTIC FLUMES

STATION	LOCATION	465.0315 SY
STA 151"C"+45.2	RT	2
	TOTAL	2

PULVERIZE AND RELAY

STATION	325.0100 SY
130"C"+54 TO 154"C"+65 LT	9168
TOTAL	9168

PAVEMENT MARKING EPOXY4-INCH

STATION	646.0106 YELLOW SOLID LF	WHITE SOLID LF	COMMENT
130"C"+66.1 TO 134"C"+06.2 LT	---	340	LANE LINE
131"C"+19.3 TO 140"C"+ 33.7 RT	---	914	LANE LINE
134"C"+96.3 TO 137"C"+15.3 LT	---	219	LANE LINE
137"C"+79.7 TO 140"C"+33.7 LT	---	254	LANE LINE
141"C"+08.6 TO 143"C"+71.8 LT	---	263	LANE LINE
141"C"+22.1 TO 150"C"+21.0 RT	---	899	LANE LINE
144"C"+32.3 TO 154"C"+16.6 LT	---	984	LANE LINE
151"C"+06.5 TO 154"C"+63.3 RT	---	357	LANE LINE
130"C"+54.5 TO 154"C"+26.8	4744	---	CENTERLINE
SUB TOTAL	4744	4230	
PROJECT TOTAL	8974		

PAVEMENT MARKING ARROWS

STATION	647.0166 EPOXY TYPE 2 EACH
134"C"+04 RT	1
134"C"+37 RT	1
PROJECT TOTAL	2

PAVEMENT MARKING EPOXY 8-INCH

STATION	646.0126 WHITE LF
133"C"+95 TO 134"C"+45 RT	50
TOTAL	50

PAVEMENT MARKING DIAGONAL EPOXY 12-INCH

STATION	647.0726 YELLOW LF
132"C"+80.7 TO 134"C"+00.0	37
135"C"+79.2 TO 137"C"+23.5	55
TOTAL	92

PAVEMENT MARKING EPOXY 18-INCH

STATION	647.0566 WHITE STOP LINE LF	COMMENT
134"C"+56 LT	18	EXETER STREET
TOTAL	18	

3

3

RESTORATION

STA	625.0100 TOPSOIL SY	629.0205 FERTILIZER TYPE A* CWT	630.0130 SEEDING MIXTURE NO. 30 LBS	630.200 SEEDING TEMPORARY* LBS	COMMENT
130"C"+54 TO 154"C"+65 LT	427	3	1	1	SOD AREAS
130"C"+54 TO 154"C"+65 LT	7935	56	16	24	EMAT AREAS
SUBTOTAL	8362	59	17	25	
UNDISTRIBUTED	2091	15	4	6	
TOTAL	10453	73	21	31	

MOBILIZATION EROSION CONTROL

LOCATION	628.1905 MOBILIZATION EROSION CONTROL EA	628.1910 MOBILZATION EMERGENCY EROSION CONTROL EA
PROJECT (14-3775(11))	4	2
TOTAL	4	2

WATER

LOCATION	ITEM 624.0100 MGAL
UNDISTRIBUTED	24
TOTAL	24

CULVERT PIPE CHECKS*

STATION	LOCATION	628.7555 EACH
131"C"+98	LT	3
132"C"+35	LT	3
133"C"+06	LT	3
134"C"+11	LT	3
141"C"+04	LT	3
141"C"+15	RT	3
143"C"+80	LT	3
145"C"+27	LT	3
145"C"+95	LT	3
146"C"+45	RT	3
147"C"+76	LT	3
150"C"+92	RT	3
152"C"+88	LT	3
UNDISTRIBUTED		12
	TOTAL	51

INLET PROTECTION

STATION	LOCATION	628.7010 TYPE B EA	628.7020 TYPE D EA
131"C"+95	LT	---	1
131"C"+95	RT	---	1
132"C"+98	RT	---	1
132"C"+98	LT	---	1
133"C"+08	RT	---	1
133"C"+08	LT	---	1
134"C"+43	LT	---	1
134"C"+78	LT	1	---
134"C"+98	LT	---	1
135"C"+14	LT	---	1
137"C"+25	LT	1	---
137"C"+65	LT	1	---
138"C"+08	LT	---	1
139"C"+20	LT	1	---
140"C"+50	LT	1	---
	TOTAL	5	10

SILT FENCE

STA TO STA	LOCATION	628.1504 SILT FENCE LF	628.1520 SILT FENCE MAINTENANCE LF
STA 146"C"+60 TO STA 148"C"+60	RT-WETLAND	425	200
UNDISTRIBUTED		250	125
	PROJECT TOTAL	675	325

EROSION CONTROL

LOCATION	628.7010 INLET PROTECTION TYPE B EA	628.7020 INLET PROTECTION TYPE D	628.7570 ROCK BAGS EA	628.7560 TRACKING PADS EA
130"C"+65 TO 154"C"65	5	10		
BARK RIVER BRIDGE	---	---	100	---
MILL RACE	---	---	200	---
UNDISTRIBUTED	0	0	75	2
	5	10	375	2

EROSION MAT

STATION	LOCATION	628.2023 EROSION MAT CLASS I B SY	628.2027 EROSION MAT CLASS II C SY
130"C"+65 TO 131"C"+15	LT	68	---
131"C"+01 TO 132"C"+02	RT	92	---
131"C"+26 TO 131"C"+89	LT	115	---
131"C"+90 TO 132"C"+10	LT	---	27
132"C"+17 TO 132"C"+25	RT	8	---
132"C"+23 TO 132"C"+53	LT	55	---
132"C"+28 TO 132"C"+74	LT	47	---
132"C"+67 TO 132"C"+74	RT	9	---
132"C"+78 TO 137"C"+34	RT	628	---
132"C"+87 TO 134"C"+40	LT	583	---
134"C"+79 TO 137"C"+36	LT	168	---
137"C"+52 TO 140"C"+68	RT	658	---
139"C"+59 TO 140"C"+62	LT	257	---
140"C"+87 TO 143"C"+92	LT	633	---
140"C"+92 TO 142"C"+69	RT	448	---
142"C"+81 TO 150"C"+52	RT	1907	---
144"C"+11 TO 145"C"+37	LT	264	---
145"C"+50 TO 146"C"+05	LT	61	---
145"C"+69 TO 146"C"+41	RT	---	51
146"C"+18 TO 147"C"+86	LT	352	---
146"C"+22 TO 148"C"+98	RT	---	330
148"C"+07 TO 149"C"+10	LT	165	---
149"C"+22 TO 151"C"+82	LT	379	---
150"C"+76 TO 155"C"+13	RT	532	---
151"C"+97 TO 152"C"+65	LT	123	---
152"C"+78 TO 154"C"+50	LT	128	---
	SUB TOTAL	7680	408
	UNDISTRIBUTED	1920	102
	PROJECT TOTAL	9600	510

SOD

STATION	LOCATION	631.1000 SOD LAWN SY	631.0300 SOD WATER MGAL
130"C"+65 TO 131"C"+15	LT	39	---
131"C"+05 TO 131"C"+49	RT	22	---
131"C"+27 TO 132"C"+03	LT	56	---
132"C"+89 TO 134"C"+36	LT	70	---
134"C"+80 TO 135"C"+80	RT	98	---
134"C"+80 TO 137"C"+33	LT	140	---
137"C"+61 TO 140"C"+63	LT	103	---
	SUB TOTAL	528	0
	UNDISTRIBUTED	132	10
	PROJECT TOTAL	660	10

TEMPORARY DITCH CHECKS*

STATION	LOCATION	628.7504 LF
UNDISTRIBUTED		48
	PROJECT TOTAL	48

TURBIDITY BARRIER

LOCATION	628.6005 SY
BRIDGE:	
NORTH SIDE	65.0
SOUTH SIDE	60.0
MILE RACE:	
EAST SIDE	10.0
TOTAL	135.0

* COMBINED QUANTITY, ADDITIONAL QUANTITIES FOUND ELSEWHERE IN PLANS.

3

SIGN REMOVALS

SIGN NUMBER	LOCATION		SIGN CODE	638.2102 MOVING SIGNS TYPE II EACH	638.2602 REMOVING SIGNS TYPE II EACH	638.3000 REMOVING SMALL SIGN SUPPORTS EACH	REMARKS
R-1	130+60.2	LT	W11-2/ WF16-7R	---	1	1	
R-2	130+57.8	RT	W11-2/ WF16-7L	---	1	1	
R-3	130+98.6	RT	R1-1	---	1	1	STOP-RETURN SIGN TO CITY OF DELAFIELD
R-4	131+16.7	RT	R7-4	---	1	1	NO PARKING ANYTIME
R-5	131+74.8	LT	R7-4	---	1	1	NO PARKING ANYTIME
R-6	132+44.1	LT	R7-4	---	1	1	NO PARKING ANYTIME; FIRE DPT. PUMPING SITE
R-7	132+76.3	RT	---	1	---	1	DAM & PARK AREA CLOSED
R-8	132+85.9	LT	---	---	1	1	USPS SIGNS
R-9	132+89.1	LT	R5-1	---	1	1	
R-10	132+96.7	LT	---	---	1	1	DO NOT ENTER
R-11	133+12.7	RT	R7-4	---	1	1	NO PARKING ANYTIME
R-12	133+87.0	RT	R7-4	---	1	1	NO PARKING ANYTIME
R-13	133+83.0	LT	R2-1	---	1	1	SPEED LIMIT 25 MPH/ NO PARKING ANY TIME
R-14	134+46.5	LT	R1-1	---	1	1	STOP/ STOP AT LINE
R-15	134+89.9	RT	S1-1	---	1	1	
R-16	135+33.2	RT	R7-4	---	1	1	NO PARKING ANYTIME
R-17	136+05.2	RT	R2-1	---	1	1	SPEED LIMIT 35 MPH
R-18	136+24.2	LT	R2-1	---	1	1	SPEED LIMIT 25 MPH
R-19	137+32.7	LT	R1-1	---	1	1	STOP
R-20	137+66.6	LT	R7-52	---	1	1	NO PARKING BETWEEN SIGNS
R-21	137+88.0	RT	R7-4	---	1	1	NO PARKING ANYTIME
R-22	140+61.0	LT	R1-1	---	1	1	STOP
R-23	140+97.6	RT	R1-1	---	1	1	STOP
R-24	142+07.7	LT	R2-5A	---	1	1	REDUCE SPEED AHEAD/ 25 MPH
R-25	143+32.0	LT	S1-1	---	1	1	
R-26	143+87.4	LT	R1-1	---	1	1	STOP
R-27	147+79.2	LT	R1-1	---	1	1	STOP
R-28	150+81.9	RT	R1-1	---	1	1	STOP
R-29	151+54.6	RT	R2-1	---	1	1	SPEED LIMIT 35 MPH
R-30	152+11.4	LT	R2-1	---	1	1	SPEED LIMIT 35 MPH
			TOTALS	1	29	30	

**NOTE: PRIVATE SIGNS TO BE REMOVED BY OWNER PRIOR TO CONSTRUCTION-SEE REAL ESTATE COMMITMENTS AND SIGN REMOVAL PLAN.

PERMANENT SIGNING

SIGN NUMBER	LOCATION		SIGN CODE	SIZE WXH	634.0812 POSTS TUBULAR STEEL 2X2-INCH 12-FOOT EACH	637.2210 SIGNS REFLECTIVE TYPE II SF	REMARKS
P-1	130+58.3	RT	R1-6	12X36	1	3.00	
P-2	130+66.2	LT	R1-6	12X36	1	3.00	
P-3	131+03.1	RT	R1-6	12X36	1	3.00	
P-4	131+98.8	RT	R1-1	36X36	1	7.46	STOP
P-4	131+98.8	RT	R1-6	12X36	---	3.00	
P-5	132+04.0	LT	OM3-L	12X36	1	3.00	
P-6	132+23.6	RT	OM3-R	12X36	1	3.00	
P-7	132+46.0	LT	OM3-L	12X36	1	3.00	
P-8	132+60.3	RT	R1-6	12X36	1	3.00	
P-9	132+62.0	RT	OM3-R	12X36	1	3.00	
P-10	132+72.9	LT	R1-6	12X36	1	3.00	
P-11	132+89.6	LT	R5-1	30X30	1	6.25	DO NOT ENTER
P-12	133+12.8	RT	R7-4	12X18	1	1.50	NO PARKING ANY TIME
P-13	133+82.7	LT	R2-1	30X36	1	7.50	SPEED LIMIT 25 MPH
P-13	133+82.7	LT	R7-4	12X18	---	1.50	NO PARKING ANY TIME
P-14	134+40.1	LT	R1-1	36X36	1	7.46	STOP
P-15	134+68.1	RT	W1-7	48X24	1	8.00	ARROW BOARD
P-16	134+83.8	RT	R4-7	18X24	1	3.00	KEEP RIGHT
P-17	134+80.9	LT	R1-6	12X36	1	3.00	
P-18	135+33.6	LT	S1-1	36X36	1	9.00	
P-19	135+69.9	RT	R4-7	18X24	1	3.00	KEEP RIGHT
R-20	136+24.5	RT	R7-4	12X18	1	1.50	NO PARKING ANY TIME
R-21	136+24.1	LT	R2-1	30X36	1	7.50	SPEED LIMIT 25 MPH
P-22	137+30.3	LT	R1-1	36X36	1	7.46	STOP
P-23	137+54.9	RT	R1-1	36X36	1	7.46	STOP
P-24	137+66.6	LT	R7-52	18X24	1	3.00	NO PARKING BETWEEN SIGNS
P-25	137+88.2	LT	R1-1	36X36	1	7.46	STOP
P-26	140+57.1	RT	R1-1	36X36	1	7.46	STOP
P-27	142+07.5	LT	W3-5	30X30	1	6.25	REDUCE SPEED AHEAD 25 MPH
P-28	143+33.0	LT	S1-1	36X36	1	9.00	
P-29	143+87.3	LT	R1-1	36X36	1	7.46	STOP
P-30	144+05.5	RT	W1-7	48X24	1	8.00	ARROW BOARD
P-31	147+77.5	LT	R1-1	36X36	1	7.46	STOP
P-32	147+97.8	RT	W1-7	48X24	1	8.00	ARROW BOARD
P-33	150+58.1	LT	W1-7	48X24	1	8.00	ARROW BOARD
P-34	150+79.9	RT	R1-1	36X36	1	7.46	STOP
P-35	151+50.0	RT	R2-1	30X36	1	7.50	SPEED LIMIT 35 MPH
P-36	152+11.3	LT	R2-1	30X36	1	7.50	SPEED LIMIT 35 MPH
			TOTALS		36	206.14	

3

FRESHWATER SUPPLY RELAY

LOCATION	SPV.0090.301 FRESHWATER SUPPLY RELAY LF
BARK RIVER BRIDGE	180
TOTAL	180

STA	RIPRAP MEDIUM 606.0200 CY	GEOTEXTILE FABRIC TYPE DF SCHEDULE HR 645.0120 SY
132"C"+40 RT	4	12
TOTAL	4	12

See Structure Plans for Additional Quantities

MILL RACE ITEMS

LOCATION	522.0360 CULVERT PIPE REINF. CONC CLASS IV 60-INCH LF	513.7005.01 RAILING STEEL TYPE C1 GALVANIZED LF	SPV.0060.401 CONCRETE ENDWALL 2X60 RCP EA
BARK RIVER MILL RACE	176	60	2
TOTAL	176	60	2

* COMBINED QUANTITY, ADDITIONAL QUANTITIES FOUND ELSEWHERE IN PLANS.

3

STORM SEWER QUANTITIES

STRUCTURE NO.	LOCATION	RIM/ FLOW ELEVATION	BOTTOM OF STRUCTURE ELEVATION	STRUCTURE DEPTH	INLET WITH SUMP 2X2.5-FT 611.3225 EACH	INLET WITH SUMP MEDIAN 1 GRATE 611.3901 EACH	INLET COVERS TYPE MS 611.0642 EACH	INLET COVERS TYPE WM 611.0660 EACH	MANHOLE TYPE MM SPV.0060.101 EACH	MANHOLE WITH SUMP 4-FT DIA. 611.2004 EACH	MANHOLE COVERS TYPE J 611.0530 EACH
1.0	131+98, 30.3' LT	---	---	---	---	---	---	---	---	---	---
2.0	131+95, 10.3' LT	889.42	884.45	4.97	---	---	---	1	---	1	---
2.1	131+95, 24.3' RT	889.42	885.19	6.23	1	---	---	1	---	---	---
3.0	132+89, 41.6' LT	887.46	884.20	3.26	---	---	---	---	1	---	1
3.1	132+38, 32.6' LT	---	---	---	---	---	---	---	---	---	---
3.2	132+96.5, 43.0' LT	---	---	---	---	---	---	---	---	---	---
4.0	132+98, 11.0' LT	888.72	884.36	6.36	---	---	---	1	---	1	---
4.1	133+08, 11.6' LT	888.76	884.45	6.31	1	---	---	1	---	---	---
5.0	132+98, 26.5' RT	888.56	884.88	5.68	1	---	---	1	---	---	---
5.1	133+08, 27.7' RT	888.56	885.00	5.56	1	---	---	1	---	---	---
6.0	134+21, 42.2' LT	890.40	885.14	5.26	---	---	---	---	---	1	1
6.1	134+00, 45.2' LT	---	---	---	---	---	---	---	---	---	---
6.2	134+44, 38.8' LT	889.45	885.32	6.13	1	---	---	1	---	---	---
6.3	134+84, 40.2' LT	889.40	885.56	5.84	---	1	1	---	---	---	---
7.0	134+21, 5.0' LT	889.99	885.39	4.60	---	---	---	---	---	1	1
8.0	135+14, 5.0' LT	892.15	885.92	6.23	---	---	---	---	---	1	1
8.1	135+14, 17.3' LT	891.95	887.89	6.06	1	---	---	1	---	---	---
8.2	134+98, 17.3' LT	891.38	888.12	5.26	1	---	---	1	---	---	---
9.0	137+43, 5.0' LT	901.77	897.41	4.36	---	---	---	---	---	1	1
9.1	137+25 34.9' LT	901.95	897.93	6.02	---	1	1	---	---	---	---
9.2	137+65, 34.9' LT	903.62	898.04	7.58	---	1	1	---	---		---
9.3	137+42, 34.9' LT	903.15	897.93	7.22	---	---	---	---	---	1	1
10.0	138+09, 5.0' LT	906.19	901.20	4.99	---	---	---	---	---	1	1
10.1	138+09, 14.1' LT	906.22	902.18	6.04	1	---	---	1	---	---	---
11.0	139+20, 5.0' LT	913.01	906.79	6.22	---	---	---	---	---	1	1
11.1	139+20, 21.5' LT	912.60	907.41	7.19	---	1	1	---	---	---	---
12.0	140+50, 5.0' LT	919.79	913.27	6.52	---	---	---	---	---	1	1
12.1	140+50, 31.8' LT	918.25	913.89	6.36	---	1	1	---	---	---	---
13.0	141+00, 26.0'LT	---	---	---	---	---	---	---	---	---	---
				TOTAL	8	5	5	10	1	10	9

STRUCTURE DEPTH = RIM/ FLOW ELEV-BOTTOM OF STR ELEV
LOCATION IS TO CENTER OF STRUCTURE OR END OF PIPE RUN.
ALL MANHOLE AND INLET STRUCTURES REQUIRE 2' SUMP

STORM SEWER QUANTITIES

FROM STRUCTURE NO.	TO STRUCTURE NO.	% SLOPE	STORM SEWER PIPE CLASS III-B 15-INCH 608.3615 LF	STORM SEWER PIPE CLASS III-B 18-INCH 608.3618 LF	APRON ENDWALL 15-INCH 520.1015 EACH	APRON ENDWALL 18-INCH 520.1018 EACH
1.0	2.0	1.62	20.3	---	1	---
2.0	2.1	2.00	34.5	---	---	---
3.0	3.1	2.32	---	51.7	---	1
3.0	3.2	0.50	---	8.1	---	1
3.0	4.0	0.50	31.9	---	---	---
4.0	4.1	0.50	10.0	---	---	---
4.0	5.0	1.00	37.6	---	---	---
5.0	5.1	1.00	10.1	---	---	---
6.0	6.1	0.50	---	21.3	---	1
6.0	6.2	0.50	23.1	---	---	---
6.2	6.3	0.50	40.5	---	---	---
6.0	7.0	0.50	---	37.2	---	---
7.0	8.0	0.50	---	93.3	---	---
8.0	8.1	1.00	12.3	---	---	---
8.1	8.2	1.00	16.8	---	---	---
8.0	9.0	5.00	---	228.2	---	---
9.0	9.3	0.50	28.0	---	---	---
9.1	9.3	0.50	16.6	---	---	---
9.2	9.3	0.83	23.1	---	---	---
9.0	10.0	5.25	---	66.0	---	---
10.0	10.1	2.00	9.1	---	---	---
10.0	11.0	5.00	---	111.7	---	---
11.0	11.1	2.50	16.5	---	---	---
11.0	12.0	5.00	---	129.7	---	---
12.0	12.1	2.00	26.9	---	---	---
12.1	13.0	6.00	54.1	---	1	---
		TOTAL	411.3	747.1	2	3

3

MARKERS CULVERT END

STA	633.5200 EACH
131+98, 30.3' LT	1
132+38, 32.7' LT	1
133+06, 34.4' LT	1
134+13, 39.4' LT	1
141+00, 26.0 LT	1
TOTAL	5

CULVERT PIPE STEEL AND APRON ENDWALLS

STA	521.0115 CULVERT PIPE CORRUGATED STEEL 15-INCH LF	521.1015 APRON ENDWALLS FOR CULVERT PIPE STEEL 15-INCH EACH	521.0728 PIPE ARCH CORRUGATED STEEL 28X20-INCH LF	521.1228 APRON ENDWALLS FOR PIPE ARCH STEEL 28x20-INCH EACH
141"C"+08 RT	18	2	---	---
144"C"+02 LT	36	2	---	---
145"C"+43 LT	25	2	---	---
146"C"+11 LT	25	2	---	---
146"C"+43 RT	18	2	---	---
147"C"+96 LT	32	2	---	---
152"C"+72 LT	22	2	---	---
150"C"+64 RT	---	---	48	2
TOTAL	176	14	48	2

ADJUSTING AND RECONSTRUCTING SANITARY MANHOLE COVERS

STA	LOCATION	611.8110 SANITARY EACH	611.0420 RECONSTRUCT EACH
130"C"+66.9	RT	1	---
130"C"+94.0	RT	1	---
131"C"+42.9	RT	---	1
132"C"+75.8	RT	---	1
134"C"+58.6	RT	---	1
135"C"+86.6	RT	1	---
137"C"+48.9	RT	1	---
137"C"+56.5	RT	1	---
139"C"+75.2	RT	---	1
143"C"+76.4	RT	1	---
147"C"+95.5	RT	1	---
149"C"+14.0	RT	1	---
149"C"+14.1	LT	1	---
151"C"+22.2	RT	1	---
152"C"+35.8	LT	1	---
TOTAL		11	4

* COMBINED QUANTITY, ADDITIONAL QUANTITIES FOUND ELSEWHERE IN PLANS.

3

	SERVICE	603.8000 CONCRETE BARRIER TEMPORARY PRECAST DELIVERED	603.8125 CONCRETE BARRIER TEMPORARY PRECAST INSTALLED	643.0300 DRUMS		643.0410 BARRICADES TYPE II		643.0420 BARRICADES TYPE III		643.0500 FLEXIBLE TUBULAR MARKER POSTS	643.0600 FLEXIBLE TUBULAR MARKER BASES	643.0705 WARNING LIGHTS TYPE A		643.0715 WARNING LIGHTS TYPE C		643.0900 TRAFFIC CONTROL SIGNS	
	DAY	LF	LF	NO.	DAY	NO.	DAY	NO.	DAY	EACH	EACH	NO.	DAY	NO.	DAY	NO.	DAY
CLEARING & GRUBBING	19	0	0	24	456	0	0	0	0	0	0	0	0	0	0	0	0
STAGE 1	94	72	72	132	12408	4	376	17	1598	123	123	25	2350	10	940	27	2538
STAGE2	77	72	72	121	9317	1	77	8	616	123	123	12	924	16	1232	20	1540
STAGE 3	14	0	0	80	1120	0	0	0	0	0	0	0	0	10	140	15	210
PLANTING	13	0	0	24	312	0	0	0	0	0	0	0	0	0	0	0	0
UNDISTRIBUTED		14	14		2361		45		221	25	25		327		231		429
TOTAL	217	158	158		25974		498		2435	271	271		3601		2543		4717

3

TEMPORARY PAVEMENT MARKING REMOVABLE TAPE

STATION	649.0400 4-INCH YELLOW SOLID LF	649.0400 4-INCH WHITE SOLID LF	COMMENT
STAGE 1	1542	575	
STAGE 2	224	430	
STAGE 3	2530	---	
SUB TOTAL	4296	1005	
PROJECT TOTAL	5301		

PAVEMENT MARKING CROSSWALK PAINT 18-INCH

STATION	LOCATION	647.0783 WHITE LF
130"C"+62	LT & RT	82
130"C"+87	RT	48
132"C"+62	LT & RT	68
TOTAL		198

*WINTER PAVEMENT MARKING FOR BINDER LIFT IF NEEDED

TRAFFIC CONTROL

LOCATION	643.0100 PROJECT EACH	643.0920 COVERING SIGNS TYPE II EACH	643.1050 SIGNS PCMS DAYS	643.2000 DETOUR EACH	643.3000 DETOUR SIGNS DAYS
PROJECT (14-3775(11))	1	2	370	1	12,950
TOTAL	1	2	370	1	12,950

TEMPORARY SIGNALS

LOCATION	SPV.0060.301 PORTABLE TEMPORARY SIGNAL UNIT EA
BARK RIVER BRIDGE	3
TOTAL	3

TEMPORARY PAVEMENT MARKING PAINT

STATION	649.0402 4-INCH YELLOW SOLID LF	649.0402 4-INCH WHITE SOLID LF	649.1100 18-INCH WHITE STOP LINE LF	COMMENT
STAGE 1	---	1140	45	
STAGE 2	1600	---	15	
STAGE 3	4744	---	---	CENTERLINE*
SUB TOTAL	6344	1140	60	
PROJECT TOTAL	7484			

*WINTER PAVEMENT MARKING FOR BINDER LIFT IF NEEDED

LIGHTING CONDUIT AND WIRE

LOCATION	652.0225 CONDUIT RIGID NON-METALLIC SCHEDULE 40 2-INCH LF	655.0610 ELECTRICAL WIRE LIGHTING 12 AWG LF	655.0620 ELECTRICAL WIRE LIGHTING 8 AWG LF
130+54 TO 137+15	570	825	2475
TOTAL	570	825	2475

LIGHTING ITEMS

LOCATION	653.0125 PULL BOXES STEEL 18X30-INCH LF	654.0101 CONCRETE BASES TYPE 1 EA	SPV.0060.501 DECORATIVE LIGHTING POLE AND ACCESSORIES EA	SPV.0060.502 LED LUMINAIRES AND ACCESSORIES EA
130+54 TO 137+15	5	4	4	4
TOTAL	5	4	4	4

LIGHTING CONDUIT

LOCATION FROM	LOCATION TO	CENTER - CENTER DISTANCE LF
CB2	PB1	180
PB1	PB2	40
PB2	LP1	5
PB2	PB3	30
PB3	LP2	45
PB3	PB4	155
PB4	LP3	20
PB4	PB5	60
PB5	LP4	5
PB5	STUB	30

* COMBINED QUANTITY, ADDITIONAL QUANTITIES FOUND ELSEWHERE IN PLANS.

R/W PROJECT NUMBER	SHEET NUMBER	TOTAL SHEETS
14-3775(11)		
FEDERAL PROJECT NUMBER	4.1	10

PLAT OF RIGHT-OF-WAY REQUIRED FOR

C.T.H. C (GENESEE ST)

CITY OF DELAFIELD

MILL ST TO OAKWOOD DR

WAUKESHA COUNTY

CONSTRUCTION PROJECT NUMBER

14-3775(11)

CONVENTIONAL SIGNS AND ABBREVIATIONS

COUNTY LINE
TOWNSHIP AND RANGE LINES
SECTION LINE
QUARTER LINE
SIXTEENTH LINE
NEW REFERENCE LINE
NEW R/W LINE
EXISTING R/W LINE
PROPERTY LINE
CORPORATE LIMITS — NAME
EASEMENT LINE
TLE AND OTHER MINOR LINES
SLOPE INTERCEPTS
UNDERGROUND FACILITY (GAS, TELEPHONE, ELECTRIC, ETC.) — G (TYPE)
FENCE
HAZARDOUS UTILITY SITE — CAUTION
CULVERT (BOX, PIPE OR CATTLE PASS) — (TYPE)
RAIL LINE
FOUNDATION OR RUIN — FDN.
BUILDING — TYPE
CEMETERY — CEMETERY
TELEPHONE PEDESTAL
IRON PIN — IP
VALVE — VLV (TYPE)
SILO, MANHOLE, VENT SEPTIC VENT, WELL, ETC. — MH (TYPE)

	NON-COMPENSABLE	COMPENSABLE
SERVICE PEDESTAL		
POWER POLE		
TELEPHONE POLE		
SIGN		

NO ACCESS (BY ACQUISITION)
NO ACCESS (BY STATUTORY AUTHORITY)
NO ACCESS (BY PREVIOUS PROJECT)

PERMANENT LIMITED EASEMENT
TEMPORARY LIMITED EASEMENT
FEE
NON-MONUMENTED SURVEY POINT
SECTION CORNER — T 5 N, R 7 E; 5, 4, 8, 9
BUSHES
TREES (DECIDUOUS) (CONIFEROUS)
WOODS

AC.	ACRE	LT.	LEFT
AH.	AHEAD	MI.	MILE
ALUM. MON.	ALUMINUM MONUMENT	PG	PAGE
ANT.	ANTENNA	P.C.	POINT OF CURVATURE
A.P.	ACCESS POINT	P.E.	PRIVATE ENTRANCE
B	BARN	PERM.	PERMANENT
BK.	BACK	P.I.	POINT OF INTERSECTION
B.M.	BENCH MARK	P.T.	POINT OF TANGENCY
C	CHURCH	P.L.E.	PERMANENT LIMITED EASEMENT
C.E.	COMMERCIAL ENTRANCE	R.	RADIUS
C/L	CENTERLINE	R.D.E.	RESTRICTED DEVELOPMENT EASEMENT
CONC. MON.	CONCRETE MONUMENT	REM.	REMAINING
CONST.	CONSTRUCTION	REST.	RESTAURANT
C.P.	CULVERT PIPE	RT.	RIGHT
C.S.M.	CERTIFIED SURVEY MAP	R/W	RIGHT OF WAY
D.	DEGREE OF CURVE	S.	SHED
ETAL	AND OTHERS	S.D.	STORM DRAINAGE
F.E.	FIELD ENTRANCE	S.F.	SQUARE FEET
FRL.	FRACTIONAL	STA.	STATION
FT.	FEET	T	TANK
G	GARAGE	TAV.	TAVERN
H	HOUSE	TEMP.	TEMPORARY
L.	LENGTH OF CURVE	T.L.E.	TEMPORARY LIMITED EASEMENT
L.C.	LONG CHORD OF CURVE	VOL.	VOLUME
L.C.B.	LONG CHORD BEARING	W	WALL

R-17-E R-18-E

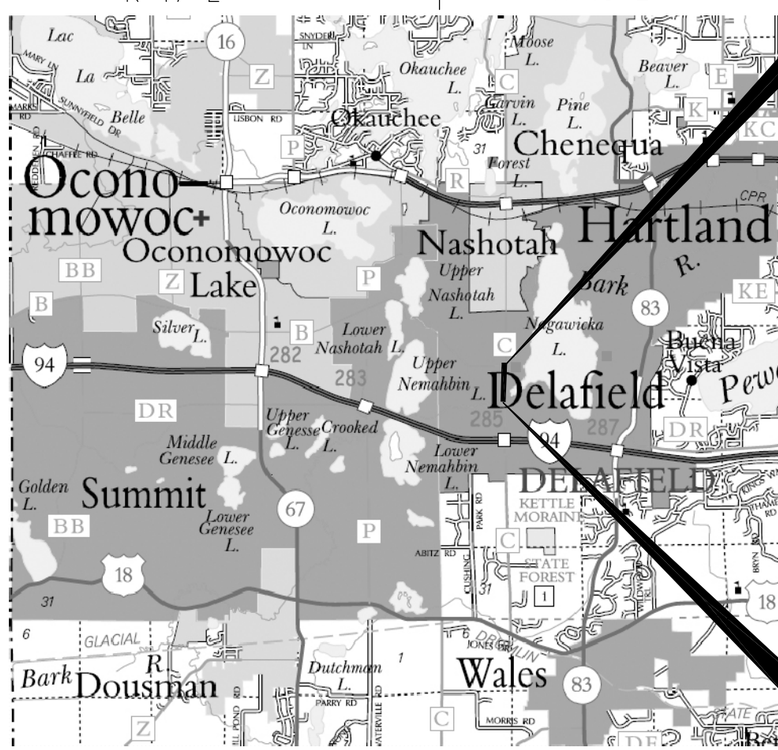

T-8-N

T-7-N

N

R-17-E R-18-E

LAYOUT

SCALE 0 1 MI.

TOTAL NET LENGTH OF CENTERLINE = 0.44197 MI. (URBAN)

END RELOCATION ORDER

PROJECT ID: 14-3775(11) STA. 154+29.59

100.72 FEET SOUTH & 3.00 FEET WEST OF THE NORTHWEST CORNER OF THE SOUTHWEST 1/4 OF SECTION 17, T.7N., R.18E.
N (Y) 182057.20
E (X) 637190.42

BEGIN RELOCATION ORDER

PROJECT ID: 14-3775(11) STA. 130+95.98

230. 72 FEET NORTH & 6.87 FEET EAST OF THE SOUTHWEST CORNER OF SECTION 17, T.7N., R.18E.,
N (Y) 179778.62
E (X) 637122.61

NOTES:

BEARINGS ON THIS PLAT ARE ORIENTED TO GRID NORTH OF THE WISCONSIN COUNTY COORDINATE SYSTEM, WAUKESHA COUNTY, NAD83/2011 ADJUSTMENT. COORDINATES SHOWN ARE GRID COORDINATES AND MAY BE USED AS GRID OR GROUND VALUES ON THIS PLAT

RIGHT-OF-WAY BOUNDARIES HEREON ARE DEFINED WITH COURSES OF THE PERIMETER OF THE HIGHWAY LANDS REFERENCED TO THE U.S. PUBLIC LAND SURVEY SYSTEM AND/OR OTHER SURVEYS OF PUBLIC RECORD.

PROPERTY LINES SHOWN ON THIS PLAT ARE DRAWN FROM DATA DERIVED FROM MAPS AND DOCUMENTS OF PUBLIC RECORD AND/OR EXISTING OCCUPATIONAL/MONUMENTED LINES. THIS PLAT MAY NOT BE A TRUE REPRESENTATION OF EXISTING OWNERSHIP LINE, EXCLUDING RIGHT OF WAY LINES, AND SHOULD NOT BE USED AS A SUBSTITUTE FOR AN ACCURATE FIELD SURVEY.

ACCEPTED FOR WAUKESHA COUNTY DEPARTMENT OF PUBLIC WORKS

DATE DIRECTOR

DATE ENGINEERING SERVICE MANAGER

ORIGINAL PLAT PREPARED BY:

WISCONSIN JAMES R. BEATY S-1834 WALES, WI LAND SURVEYOR

REVISION DATE

7/27/2015 James R. Beaty
DATE PROFESSIONAL LAND SURVEYOR

FILE NAME : Z:\GENESEE ST\14-3775(11)_RW_TITLE.DWG PLOT DATE : 07/27/2015 10:00 AM PLOT BY : JBEATY PLOT NAME : _____

WISDOT/CADDS SHEET 50

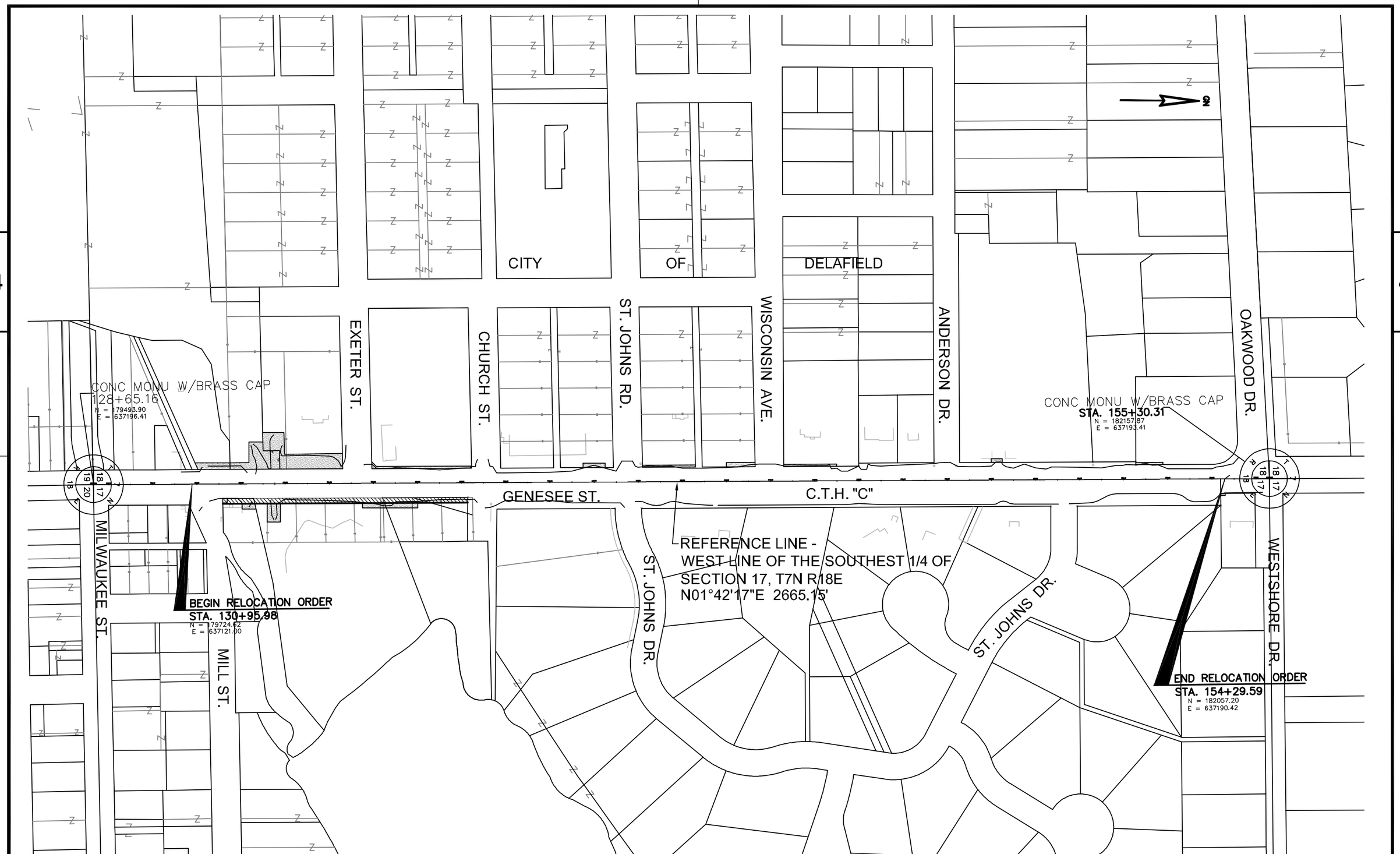

REVISION DATE	DATE 07/27/2015	SCALE IN FEET 0 100 200	HWY: C.T.H. "C"	CONSTRUCTION PROJECT No. 14-3775(11)	
	GRID FACTOR: N/A		COUNTY: WAUKESHA	R/W PROJECT No. 14-3775(11)	PLAT SHEET NO.: 4.2 77 E

SCHEDULE OF LANDS & INTERESTS REQUIRED

AREAS SHOWN IN THE TOTAL AREA COLUMN MAY BE APPROXIMATE AND ARE DERIVED FROM TAX ROLLS OR OTHER AVAILABLE SOURCES AND MAY NOT INCLUDE LANDS OF THE OWNER WHICH ARE NOT CONTIGUOUS TO THE AREA TO BE ACQUIRED.

4

PARCEL NO.	SHEET NO.	OWNER	TAX I.D.	INTEREST REQ'D.	TOTAL AREA ACRES	EASEMENT ACRES REQ'D. T.L.E.	P.L.E.	R/W ACRES REQUIRED NEW	EXIST.	TOTAL	TOTAL ACRES REM.
1	4.5	ROGER W. SALICK	DELC 0787 053	TLE	0.737	0.026	–	0.00	0.000	0.000	–
*2	4.5	CITY OF DELAFIELD	DELC 0793 987 003	TLE	26.078	0.096	–	0.00	0.000	0.000	–
3	4.5	ST. JOHNS MILITARY ACADEMY, INC	DELC 0792–058–001	PLE, TLE	1.45	0.048	0.113	0.00	0.000	0.000	–
4	4.5	CITY OF DELAFIELD	DELC 0787–053	FEE, TLE	0.579	.008	–	0.020	0.000	0.020	0.559
*5	4.5 & 4.6	CITY OF DELAFIELD	DELC 0793 987 003	FEE, TLE, HWY ESMT	26.078	0.042	–	0.081	0.316	0.397	25.681
6	4.6	CITY OF DELAFIELD	DELC 0787–998	FEE, TLE	0.452	0.018	–	0.053	0.000	0.053	0.399
*7	4.7	ST. JOHNS MILITARY ACADEMY, INC	DELC 0792–078	TLE	1.99	0.014	–	0.00	0.000	0.000	–
*8	4.7 & 4.8	ST. JOHNS MILITARY ACADEMY, INC	DELC 0792–078	TLE	1.99	0.015	–	0.00	0.000	0.000	–
9	4.8	ST. JOHNS MILITARY ACADEMY, INC	DELC 0792–992	TLE	0.93	0.014	–	0.00	0.000	0.000	–
12	4.9	DAVID B. LEEF	DELC 0792–018–004	TLE	4.43	0.004	–	0.00	0.000	0.000	–
14	4.10	LAFORE TRUST	DELC 0792–999	TLE	0.935	0.007	–	0.00	0.000	0.000	–
15	4.6	ST. JOHNS CHRYSOSTOM CHURCH	DELC 0792 988	TLE	1.88	0.027	–	0.00	0.000	0.000	–
16	4.7	ST. JOHNS MILITARY ACADEMY, INC	DELC 0792–066	TLE	1.99	0.012	–	0.00	0.000	0.000	–
17	4.10	DR. DANIEL T. MURRAY PROPERTY MANAGEMENT LLC	DELC 0787–999	TLE, HWY ESMT	0.514	0.001	–	0.00	0.000	0.000	–
101	4.5 & 4.6	DELAHART WPCC	–	RELEASE OF RIGHTS	–	–	–	–	–	–	–
102	4.5	WE–ENERGIES GAS	–	RELEASE OF RIGHTS	–	–	–	–	–	–	–

note: * – Indicates same owner and tax key parcel identification number separated by public right of way (2&5) and (7&8)

Owners names are shown for reference purposes only and are subject to change prior to the transfer interests to the department.

Total areas shown per tax records as supplied by title company and subject to change upon complete individual property surveys.

COURSE TABLES

4

ACQUISITION INFORMATION

ACQUSITION LINE TABLE				
PARCEL	TYPE	LINE	BEARING	LENGTH
1	TLE	323-324	S67°44′48″W	16.41′
1	TLE	324-325	N01°42′17″E	79.35′
1	TLE	325-322	S89°17′07″E	15.00′
1	TLE	322-323	S01°42′17″W	72.95′
2	TLE	322-325	N89°17′07″W	15.00′
2	TLE	325-326	N01°42′17″E	42.72′
2	TLE	326-327	N88°17′42″W	47.00′
2	TLE	327-328	N01°42′17″E	31.48′
2	TLE	328-329	S89°17′02″E	20.00′
2	TLE	329-330	N01°42′17″E	37.50′
2	TLE	330-331	S89°17′02″E	42.00′
2	TLE	331-322	S01°42′18″W	112.51′
3	TLE	378-330	N89°17′02″W	8.27′
3	TLE	330-329	S01°42′17″W	37.50′
3	TLE	329-332	N89°17′02″W	41.01′
3	TLE	332-333	N01°42′17″E	48.60′
3	TLE	333-334	S89°23′29″E	49.17′
3	TLE	334-378	S01°08′21″W	11.19′
3	PLE	336-331	S01°42′17″W	142.60′
3	PLE	331-378	N89°17′02″W	33.74′
3	PLE	378-335	N01°08′21″E	142.59′
3	PLE	335-336	S89°17′02″E	35.14′
4	TLE	308-307	S88°17′42″E	12.00′
4	TLE	307-306	N01°42′17″E	31.67′
4	TLE	306-304	S79°02′18″W	12.30′
4	TLE	304-308	S01°42′17″W	28.97′
4	FEE	305-302	S89°06′09″W	12.00′
4	FEE	302-303	N01°42′17″E	70.24′
4	FEE	303-304	N79°02′18″E	12.30′
4	FEE	304-305	S01°42′17″W	72.77′
5	TLE	312-311	S88°17′43″E	41.59′
5	TLE	311-310	N01°42′17″E	30.00′
5	TLE	310-309	N88°17′43″W	41.59′
5	TLE	309-312	S01°42′17″W	30.00′
5	FEE	303-313	N01°42′17″E	291.78′
5	FEE	313-316	N70°56′18″E	12.83′
5	FEE	316-304	S01°42′17″W	293.63′
5	FEE	304-303	S79°02′18″W	12.30′
5	TLE	316-317	N70°56′18″E	11.76′
5	TLE	317-318	S01°42′18″W	53.77′
5	TLE	318-319	N88°17′43″W	11.00′
5	TLE	319-316	N01°42′17″E	49.60′

ACQUSITION LINE TABLE				
PARCEL	TYPE	LINE	BEARING	LENGTH
6	TLE	317-316	S70°56′18″W	11.76′
6	TLE	316-320	N01°42′17″E	75.38′
6	TLE	320-321	S88°17′43″E	11.00′
6	TLE	321-317	S01°42′17″W	71.21′
6	FEE	313-314	N01°42′17″E	193.53′
6	FEE	314-315	S87°29′19″E	12.00′
6	FEE	315-316	S01°42′17″W	188.81′
6	FEE	316-313	S70°56′18″W	12.83′
15	TLE	337-338	N89°17′07″W	15.00′
15	TLE	338-377	N46°12′35″E	14.26′
15	TLE	377-339	N01°42′17″E	216.05′
15	TLE	339-340	S89°17′07″E	5.00′
15	TLE	340-337	S01°42′17″W	226.05′
16	TLE	343-344	S88°17′43″E	10.13′
16	TLE	344-341	S01°42′17″W	50.00′
16	TLE	341-342	N88°17′43″W	10.13′
16	TLE	342-343	N01°42′17″E	50.00′
7	TLE	345-346	N88°17′07″W	5.00′
7	TLE	346-347	N01°42′17″E	120.02′
7	TLE	347-348	N89°17′07″E	5.00′
7	TLE	348-345	S01°42′17″W	120.02′
8	TLE	349-350	N88°17′43″W	10.00′
8	TLE	350-351	N01°42′17″E	64.72′
8	TLE	351-352	S89°17′07″E	10.00′
8	TLE	352-349	S01°42′17″W	64.89′
9	TLE	353-354	N88°17′43″W	5.00′
9	TLE	354-355	N01°42′17″E	120.32′
9	TLE	355-356	S88°17′43″E	5.00′
9	TLE	356-353	S01°42′17″W	120.32′
12	TLE	357-358	N88°17′43″W	8.00′
12	TLE	358-359	N01°42′17″E	25.00′
12	TLE	359-360	S88°17′43″E	8.00′
12	TLE	360-357	S01°42′17″W	25.00′
14	TLE	373-374	N88°17′43″W	5.00′
14	TLE	374-375	N01°42′05″E	61.42′
14	TLE	375-376	S88°17′43″E	5.00′
14	TLE	376-373	S01°42′05″W	61.43′
17	TLE	361-362	N01°42′17″E	10.00′
17	TLE	362-363	S88°35′24″E	5.00′
17	TLE	363-364	S01°42′17″W	10.00′
17	TLE	364-361	N88°35′24″W	5.00′

ACQUSITION POINT COORDINATES

POINT #	NORTHING	EASTING
302	179785.6638	637155.8327
303	179855.8763	637157.9221
304	179858.2147	637169.995
305	179785.4445	637169.8302
306	179860.5535	637182.07
307	179828.9	637181.13
308	179829.25	637169.13
309	179915.9471	637171.7132
310	179914.7099	637213.284
311	179884.7276	637212.3917
312	179885.9648	637170.8209
313	180147.5254	637166.6039
314	180340.9674	637172.3567
315	180340.4416	637184.3463
316	180151.7152	637178.7297
317	180155.5573	637189.849
318	180101.81	637188.25
319	180102.13	637177.25
320	180227.0782	637180.9726
321	180226.7509	637191.9677
322	179805.1761	637090.38
323	179732.2611	637088.21
324	179726.045	637073.0184
325	179805.3632	637075.379
326	179848.0606	637076.6497
327	179849.459	637029.6705
328	179880.9284	637030.607
329	179880.6785	637050.6104
330	179918.1619	637051.726
331	179917.637	637093.7275
332	179881.1909	637009.6075
333	179929.772	637011.0533
334	179929.2498	637060.2171
335	180060.6159	637062.8293
336	180060.1775	637097.9693
337	180126.1623	637099.933
338	180126.3494	637084.9342
339	180352.17	637101.6569
340	180352.1076	637106.6572
341	180604.2325	637114.1609
342	180604.5338	637104.0368
343	180654.5117	637105.5242
344	180654.2104	637115.6483
345	180739.0152	637118.1721
346	180739.0776	637113.1718
347	180859.0483	637116.7418
348	180858.9859	637121.7425
349	180929.0887	637123.8281
350	180929.3862	637113.8327
351	180994.0791	637115.7578
352	180993.9544	637125.7585
353	181058.7085	637127.6862
354	181058.8288	637122.6879
355	181179.1553	637126.2681
356	181178.9781	637131.2654
357	181529.0268	637134.6815
358	181529.2694	637126.6852
359	181554.2583	637127.4289
360	181554.0203	637135.4254
361	182046.195	637223.105
362	182056.1907	637223.4024
363	182056.0677	637228.401
364	182046.072	637228.1035
373	181856.2432	637151.4314
374	181856.4021	637146.4339
375	181917.7997	637148.2525
376	181917.6508	637153.2554
377	180136.2195	637095.2301
378	179918.06	637059.99

4

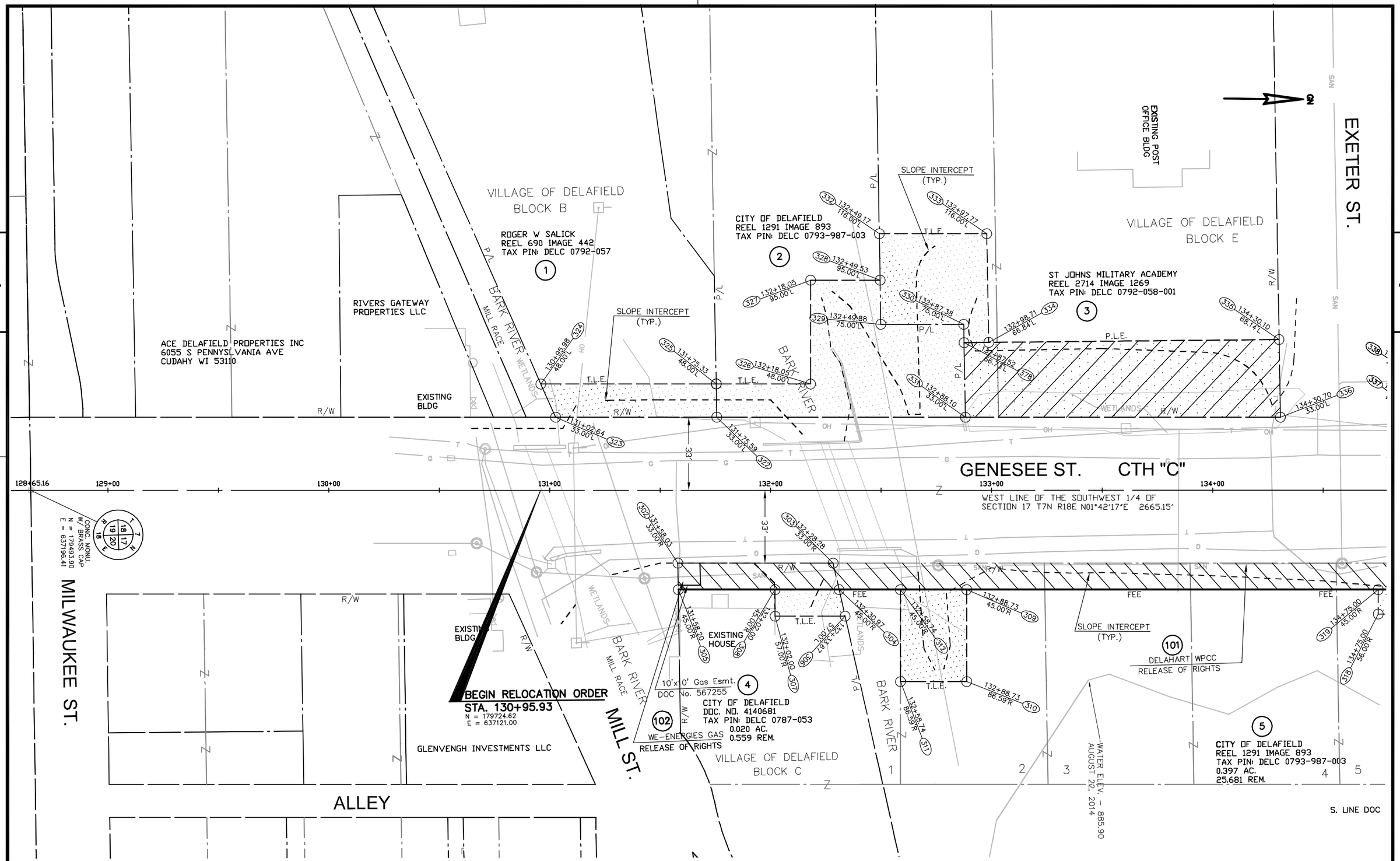

REVISION DATE	DATE 07/27/2015	SCALE IN FEET 0 20 40	HWY: C.T.H. "C"	CONSTRUCTION PROJECT No. 14-3775(11)		
	GRID FACTOR: N/A		COUNTY: WAUKESHA	R/W PROJECT No. 14-3775(11)	PLAT SHEET NO.: 4.5	80	E

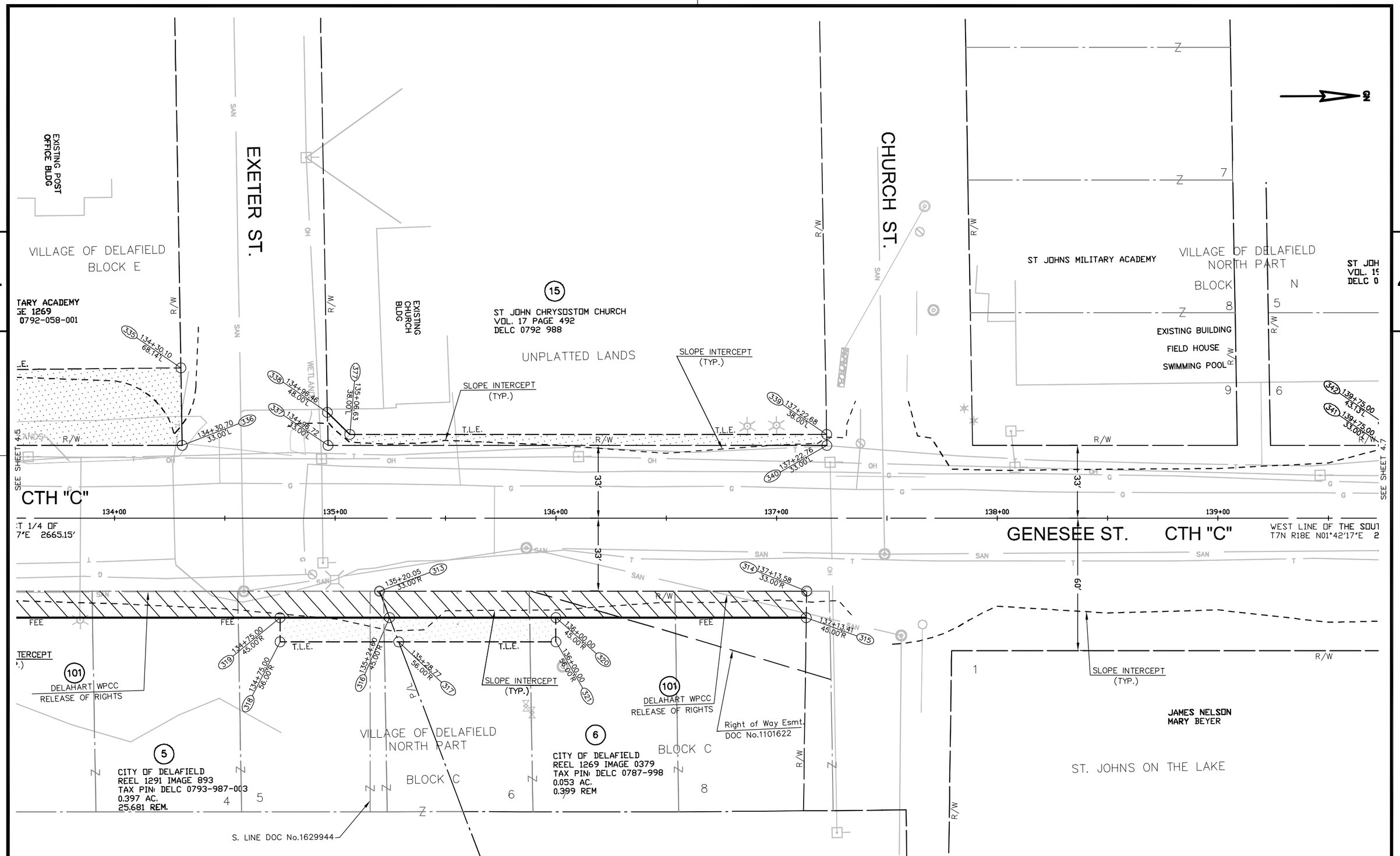

REVISION DATE	DATE 07/27/2015	SCALE IN FEET 0 20 40	HWY: C.T.H. "C"	CONSTRUCTION PROJECT No. 14-3775(11)		
	GRID FACTOR: N/A		COUNTY: WAUKESHA	R/W PROJECT No. 14-3775(11)	PLAT SHEET NO.: 4.6	E

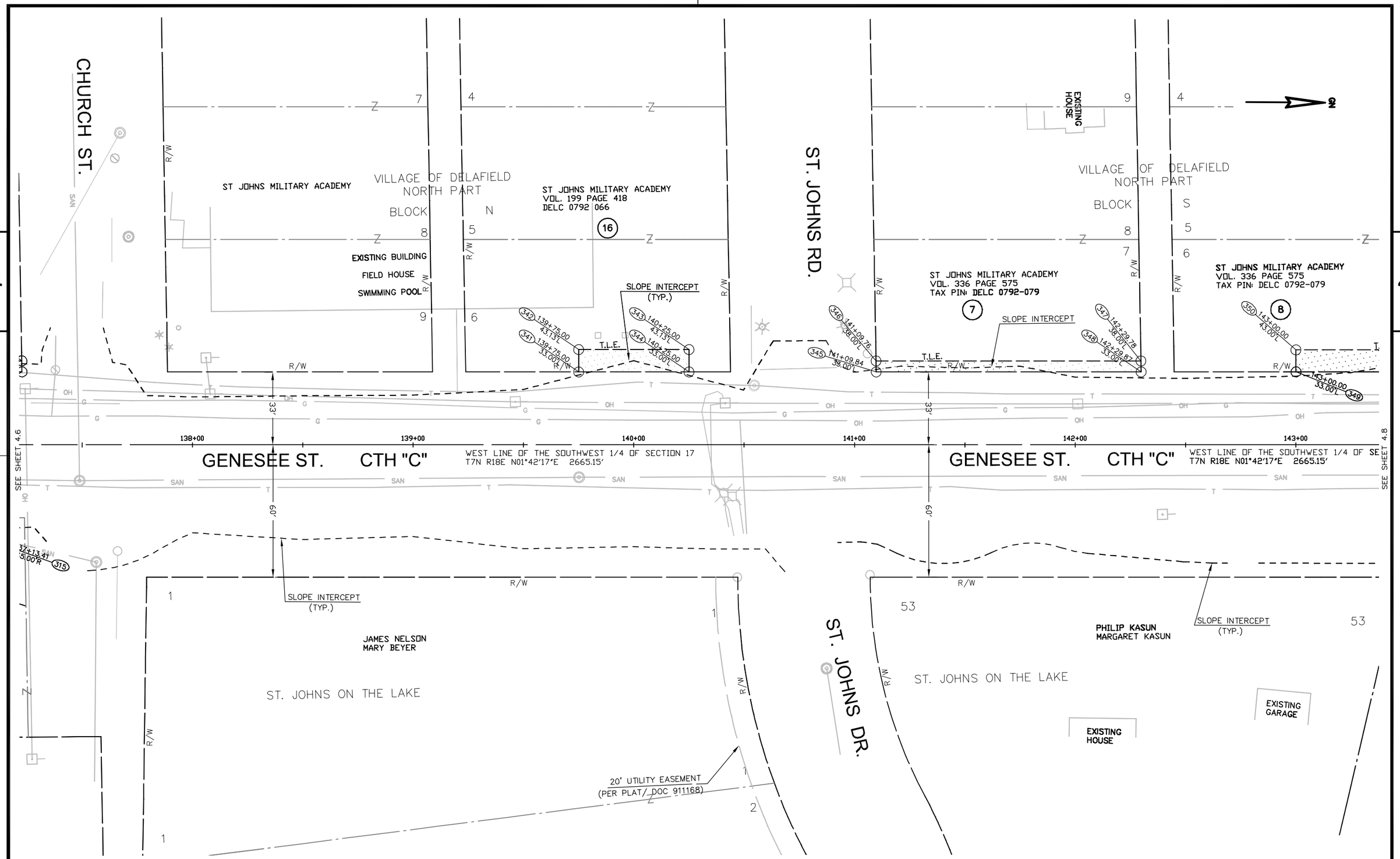

REVISION DATE	DATE 07/27/2015	SCALE IN FEET 0 20 40	HWY: C.T.H. "C"	CONSTRUCTION PROJECT No. 14-3775(11)		
	GRID FACTOR: N/A		COUNTY: WAUKESHA	R/W PROJECT No. 14-3775(11)	PLAT SHEET NO.: 4.7	82	E

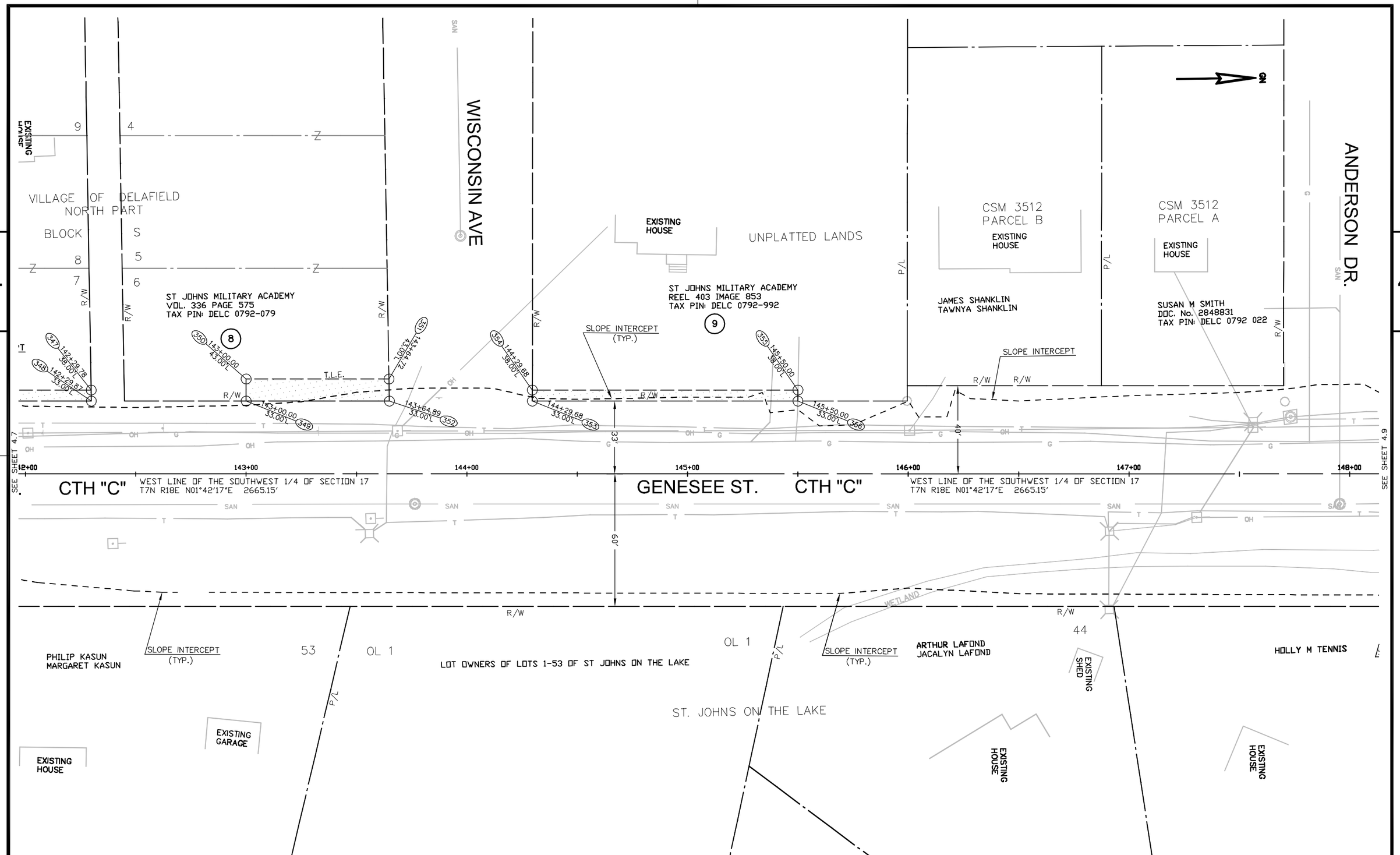

REVISION DATE	DATE 07/27/2015	SCALE IN FEET 0 20 40	HWY: C.T.H. "C"	CONSTRUCTION PROJECT No. 14-3775(11)	
	GRID FACTOR: N/A		COUNTY: WAUKESHA	R/W PROJECT No. 14-3775(11)	PLAT SHEET NO.: 4.8 83 E

4

ANDERSON DR.

512
- A

SMITH
#848831
DELC 0792 022

R/W

CSM 9470
LOT 2

DAVID LEEF
REEL 820 IMAGE 368
DOC #3435679
TAX PIN: DELC 0792-018-004
12

CSM 6446
LOT 3

NORMAN & SHIRLEY SELTZER TRUST

UNPLATTED LA

LAFORE TRUST
REEL 1670 IMAGE 252
DOC #3607351
TAX PIN: DELC 0792-999
14

P/L

SLOPE INTERCEPT
(TYP.)

SLOPE INTERCEPT

SLOPE INTERCEPT

T.L.E.

358 149+00.00 48.00'L
359 149+25.00 48.00'L
149+00.00 40.00'L 357
R/W 149+25.00 40.00'L 360
374 152+27.58 37.99'L
375 152+89.00 38.00'L
152+89.00 33.00'L 376
151+27.57 32.99'L 373

SEE SHEET 4.8

SEE SHEET 4.10

40'

33'

GENESEE ST. CTH "C"

148+00 149+00 150+00 151+00 152+00 153+00

SAN OH T G

WETLAND

60'

43 42 41

HOLLY M TENNIS

TERRY L GEIER
ANNE M WINTER-GEIER

EXISTING HOUSE

ST. JOHNS ON THE LAKE

20' UTILITY EASEMENT
(PER PLAT/ DOC 911168)

ST. JOHNS DR.

RICHARD L DAY
SALLY M DAY

CSM 3749
33-A

REVISION DATE	DATE 07/27/2015	SCALE IN FEET 0 20 40	HWY: C.T.H. "C"	CONSTRUCTION PROJECT No. 14-3775(11)		
	GRID FACTOR: N/A		COUNTY: WAUKESHA	R/W PROJECT No. 14-3775(11)	PLAT SHEET NO.: 4.9	84	E

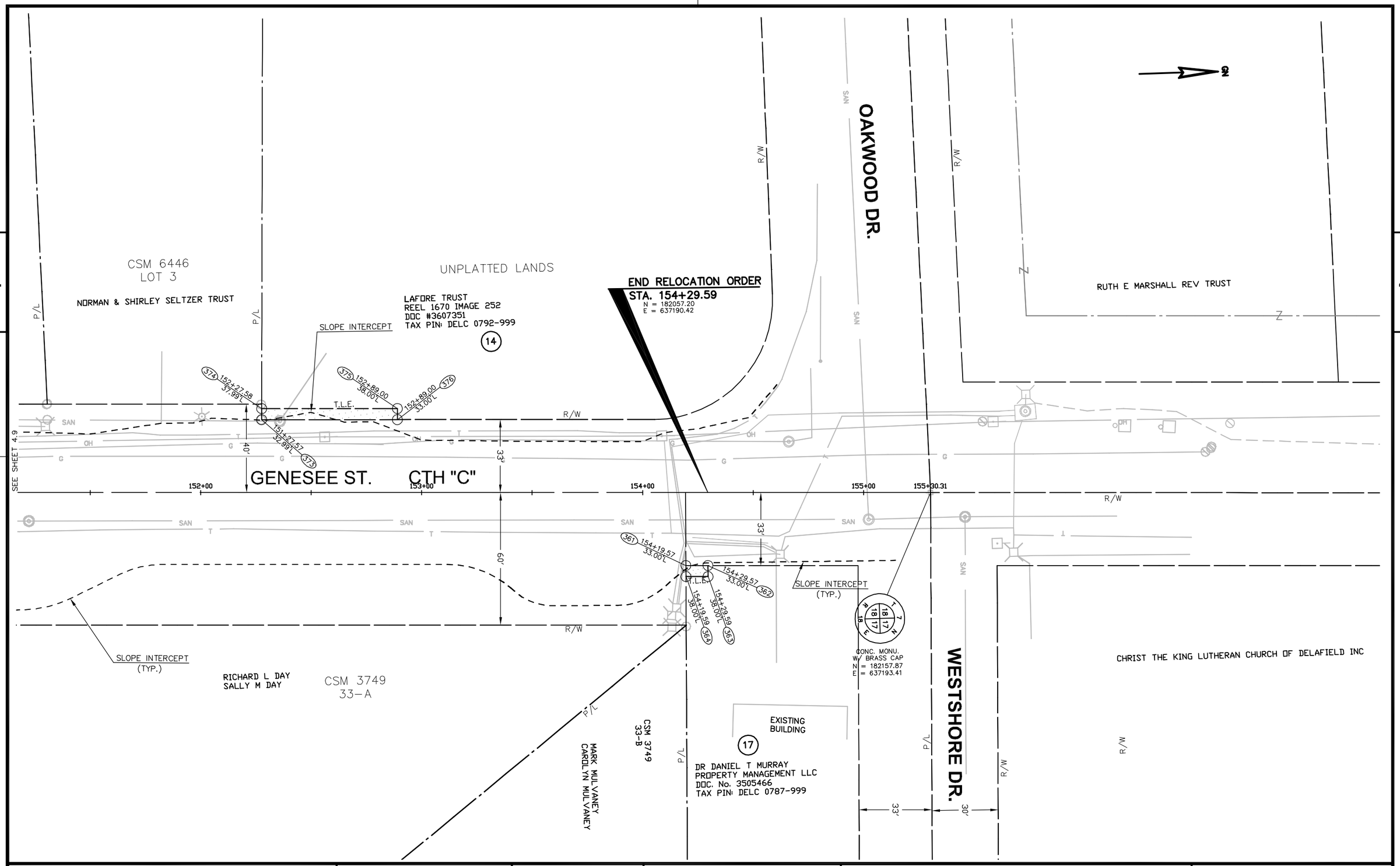

REVISION DATE	DATE 07/27/2015	SCALE IN FEET 0 20 40	HWY: C.T.H. "C"	CONSTRUCTION PROJECT No. 14-3775(11)		
	GRID FACTOR: N/A		COUNTY: WAUKESHA	R/W PROJECT No. 14-3775(11)	PLAT SHEET NO.: 4.10	85	E

NO.	STATION	DESCRIPTION	OFFSET	ELEV.
1	133+58	CORNER OF CONC STOOP USPS	137' L	891.66
2	136+03	TOP OF WELL CASING	67' R	892.71

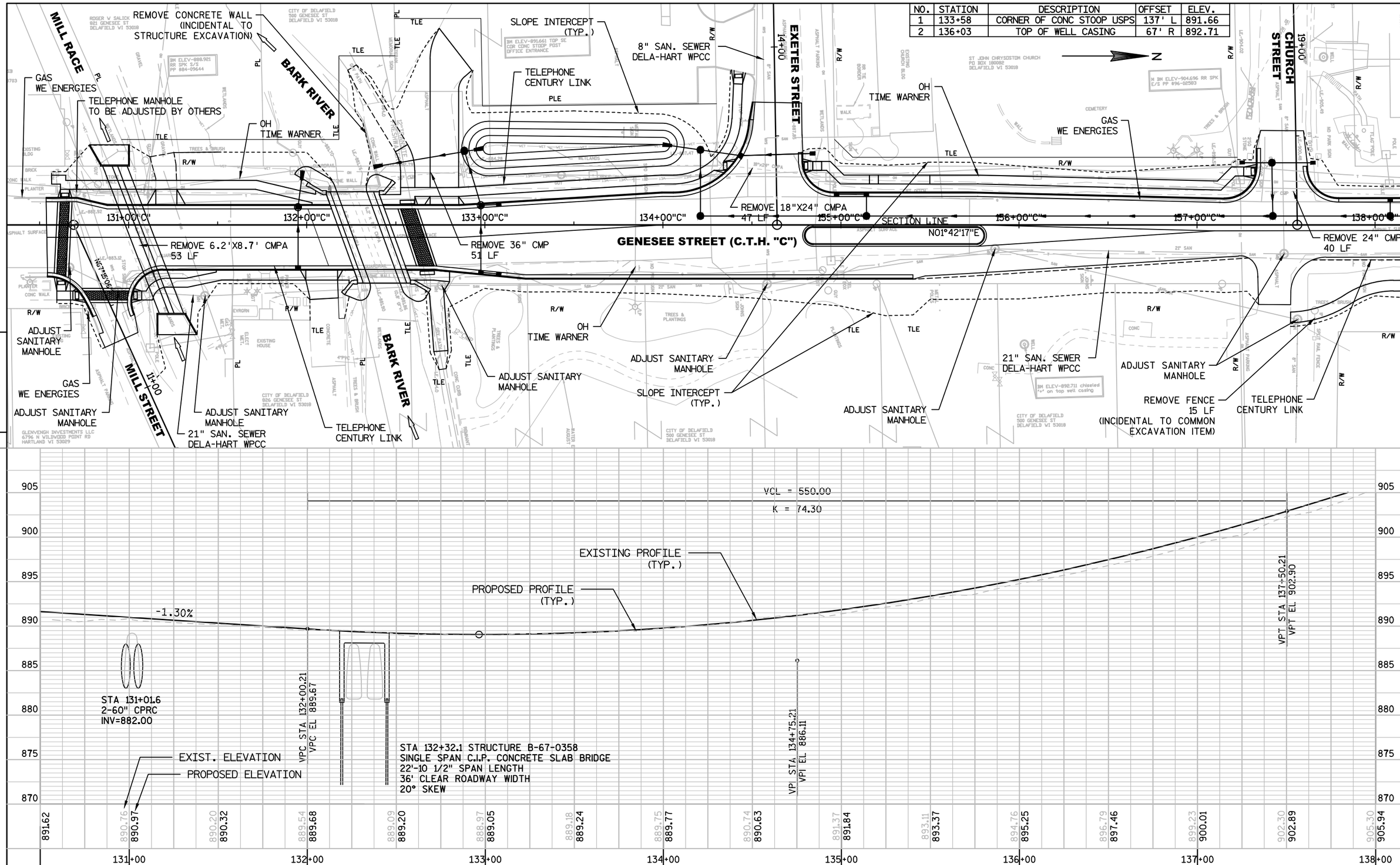

PROJECT NO:14-3775(11)	HWY:CTH "C"	COUNTY:WAUKESHA	PLAN AND PROFILE: GENESEE STREET	SHEET 86	E

FILE NAME : S:\CAD PROJECTS\409-14 CTH C\SHT\14-3775(11) SHEET PLAN PROFILE.DWG
LAYOUT NAME - ****
PLOT DATE : 9/3/2008 9:41 AM PLOT BY : HMERSON PLOT NAME : ---------- PLOT SCALE : 1:50_XREF

NO.	STATION	DESCRIPTION	OFFSET	ELEV.
3	141+68	CORNER OF PORCH, HSE#505	175' L	923.33
4	136+03	CORNER OF PORCH, HSE#1307	91' L	922.06

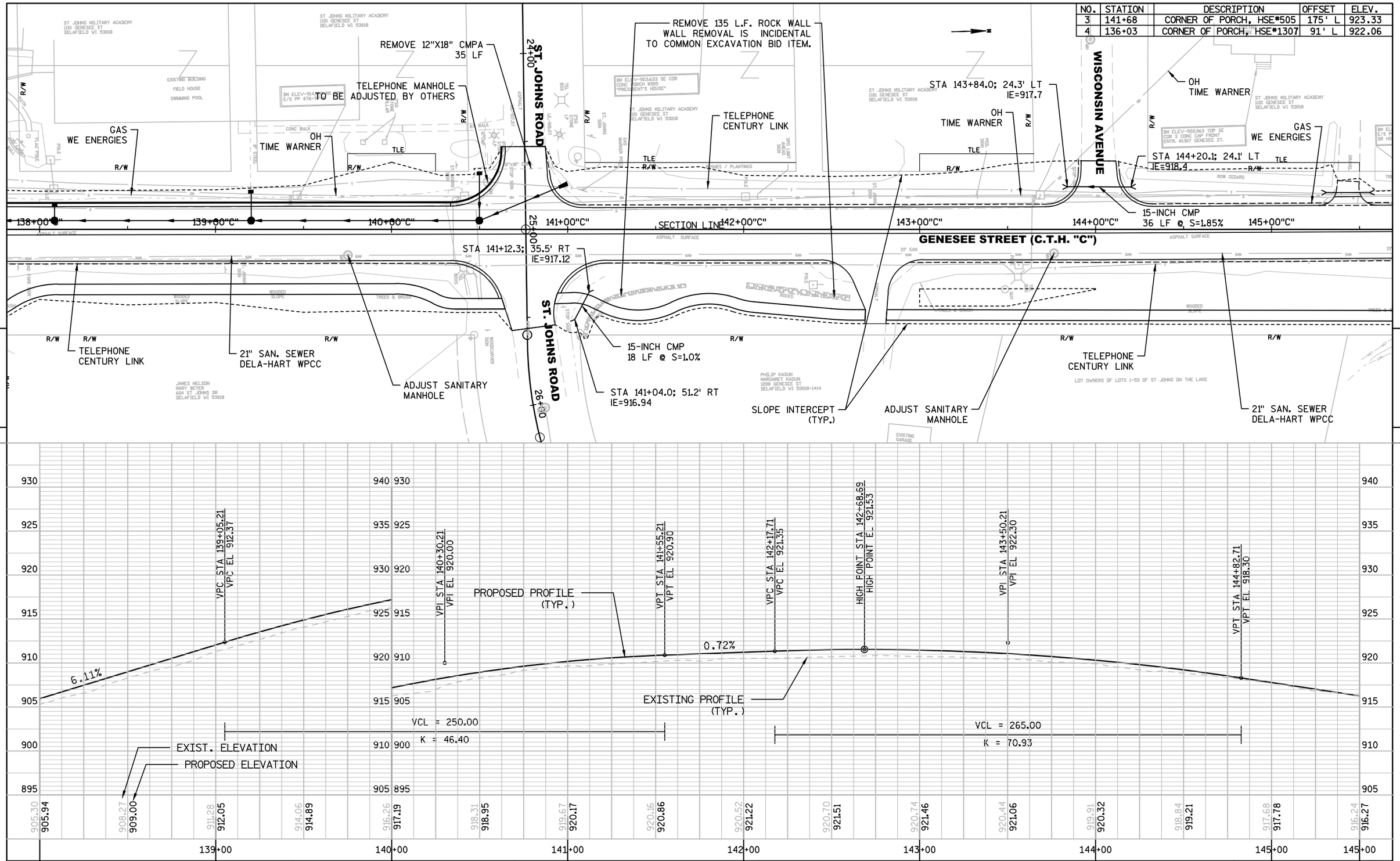

PROJECT NO:14-3775(11)	HWY:CTH "C"	COUNTY:WAUKESHA	PLAN AND PROFILE: GENESEE STREET	SHEET 87	E

FILE NAME : S:\CAD PROJECTS\409-14 CTH C\SHT\14-3775(11) SHEET PLAN PROFILE.DWG
LAYOUT NAME - ****
PLOT DATE : 9/3/2008 9:41 AM PLOT BY : HMERSON PLOT NAME : ---------- PLOT SCALE : 1:50_XREF

NO.	STATION	DESCRIPTION	OFFSET	ELEV.
5	147+40	CORNER OF PORCH, HSE#542	115' L	913.89
6	149+64	CORNER OF PORCH, HSE#735	119' R	912.96

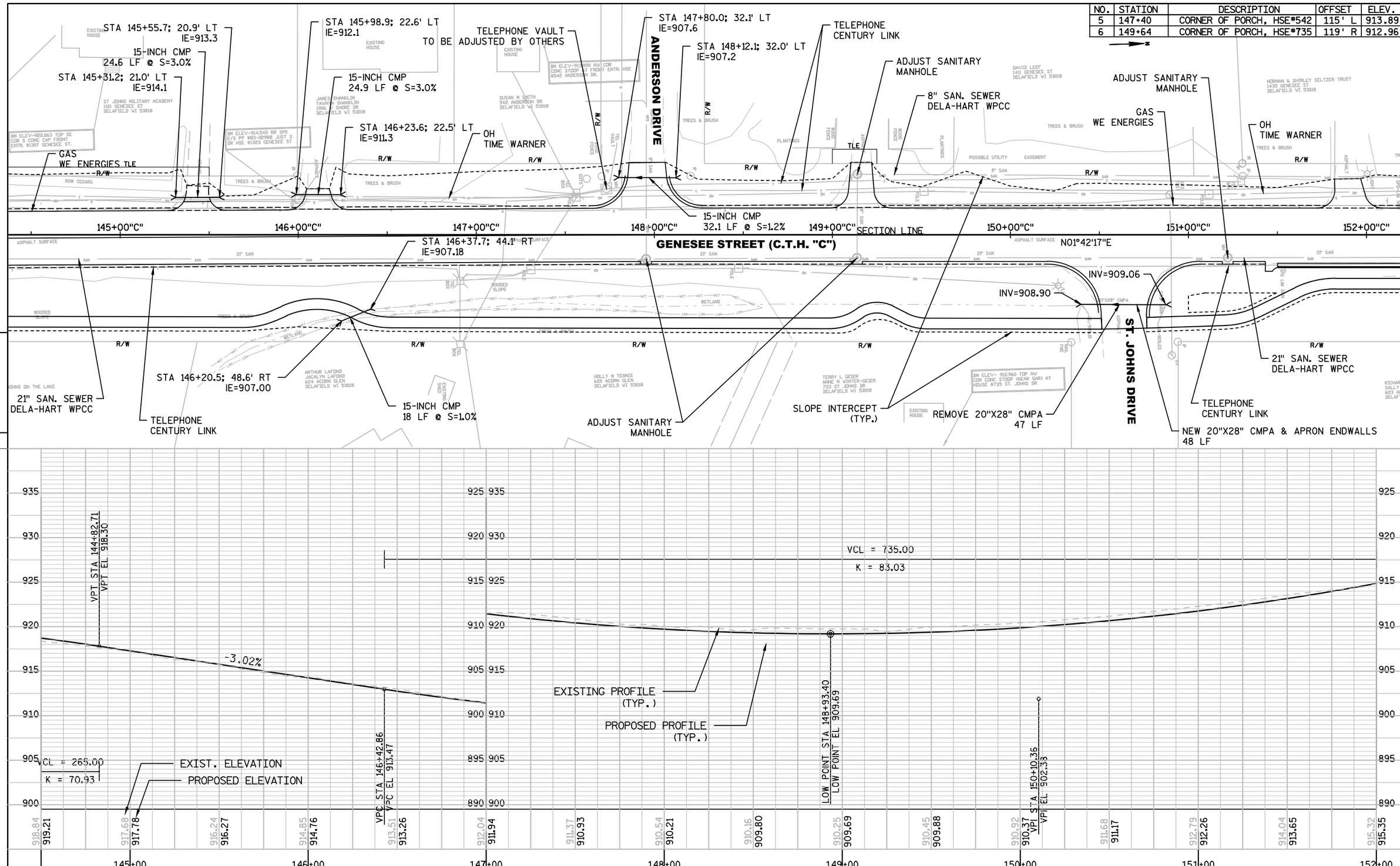

PROJECT NO:14-3775(11)	HWY:CTH "C"	COUNTY:WAUKESHA	PLAN AND PROFILE: GENESEE STREET	SHEET 88	E

FILE NAME : S:\CAD PROJECTS\409-14 CTH C\SHT\14-3775(11) SHEET PLAN PROFILE.DWG PLOT DATE : 9/3/2008 9:41 AM PLOT BY : HMERSON PLOT NAME : PLOT SCALE : 1:50_XREF WISDOT/CADDS SHEET 45

LAYOUT NAME - ****

NO.	STATION	DESCRIPTION	OFFSET	ELEV.
7	154+41	CORNER OF STOOP, HSE#1452	95' L	932.48

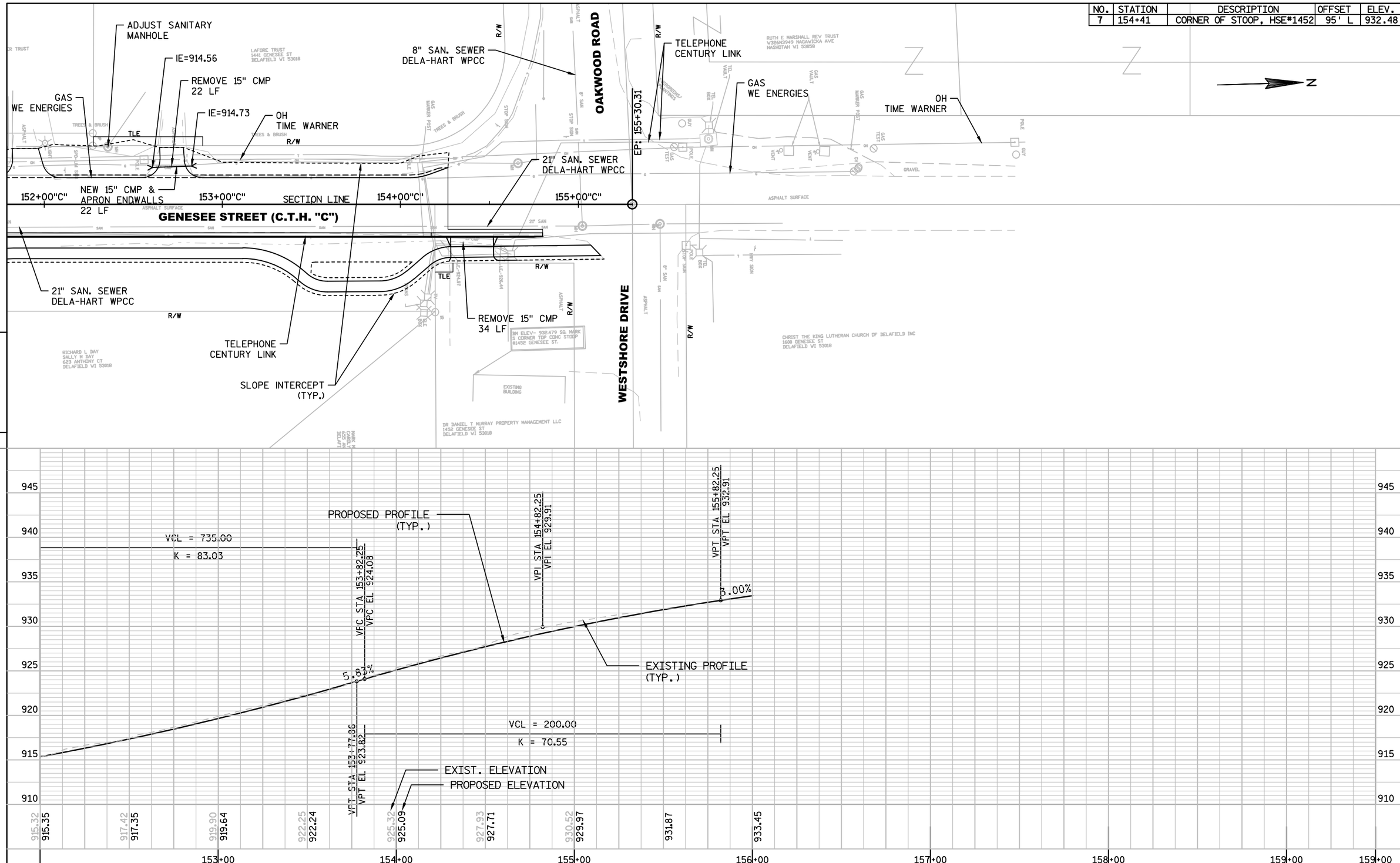

PROJECT NO:14-3775(11)	HWY:CTH "C"	COUNTY:WAUKESHA	PLAN AND PROFILE: GENESEE STREET	SHEET 89	E

FILE NAME : S:\CAD PROJECTS\409-14 CTH C\SHT\14-3775(11) SHEET PLAN PROFILE.DWG
LAYOUT NAME - ****
PLOT DATE : 9/3/2008 9:41 AM PLOT BY : HMERSON PLOT NAME : ---------- PLOT SCALE : 1:50_XREF

8A5 sheet b: Inlet Covers Type B, B-A, C, MS, MS-A, & WM

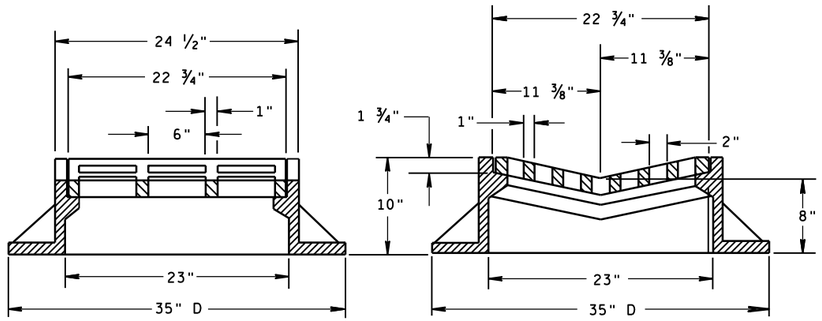

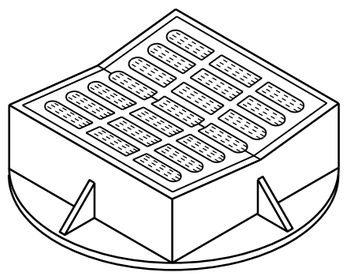

TYPE "B"

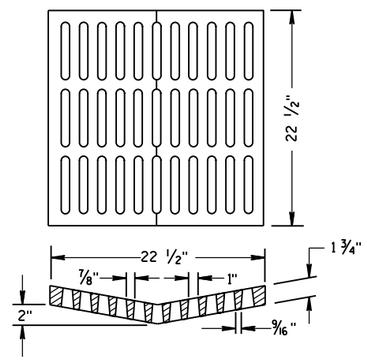

ALTERNATIVE GRATE FOR TYPE "B" COVER

USE WHERE PEDESTRIAN OR BICYCLE TRAFFIC IS POSSIBLE.

NOTED AS TYPE B-A ON THE DRAINAGE TABLE

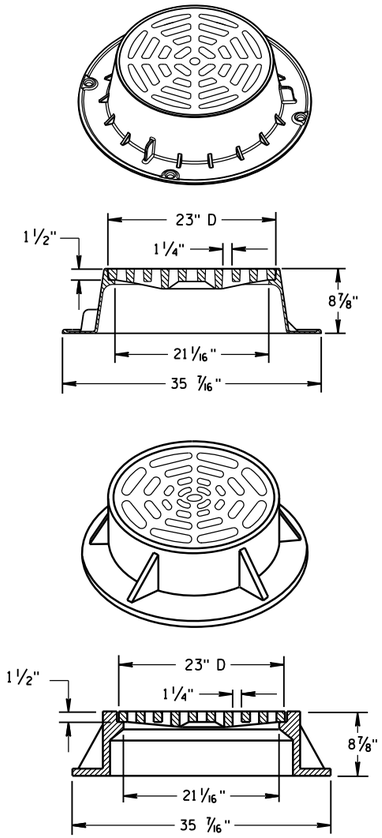

TYPE "C"

NOTE: EITHER CASTING IS ACCEPTABLE

GENERAL NOTES

DETAILS OF CONSTRUCTION, MATERIALS AND WORKMANSHIP NOT SHOWN ON THIS DRAWING SHALL CONFORM TO THE PERTINENT REQUIREMENTS OF THE STANDARD SPECIFICATIONS AND THE APPLICABLE SPECIAL PROVISIONS.

DETAIL DRAWINGS FOR PROPOSED ALTERNATE DESIGNS FOR CATCH BASIN, MANHOLE AND INLET COVERS SHALL BE SUBMITTED TO THE ENGINEER FOR APPROVAL PROVIDING THAT SUCH ALTERNATE DESIGNS MAKE PROVISION FOR EQUIVALENT CAPACITY AND STRENGTH.

ROUND FRAMES AND COVERS SHALL HAVE CONTINUOUSLY MACHINED BEARING SURFACES TO PREVENT ROCKING AND RATTLING.

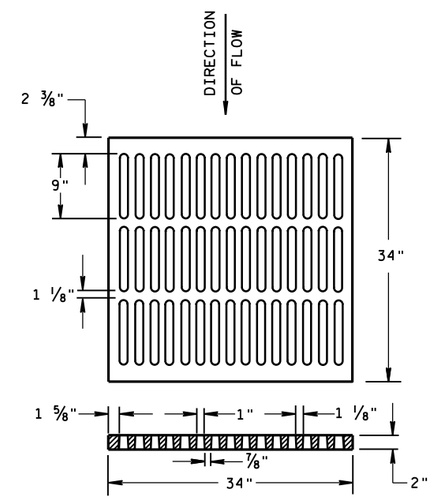

ALTERNATIVE TYPE "MS"

USE WHERE PEDESTRIAN OR BICYCLE TRAFFIC IS PERMITTED

NOTED AS TYPE MS-A ON THE DRAINAGE TABLE

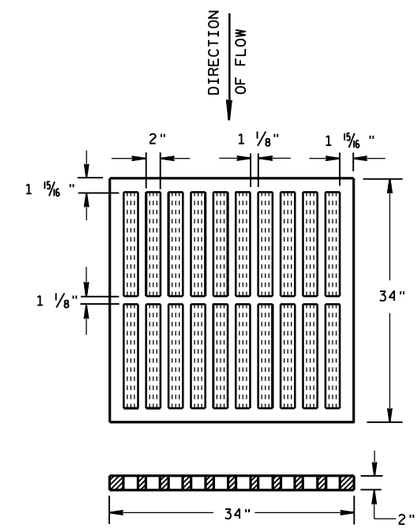

TYPE "MS"

USE ON FREEWAYS AND EXPRESSWAYS

NOTED AS TYPE MS ON DRAINAGE TABLE

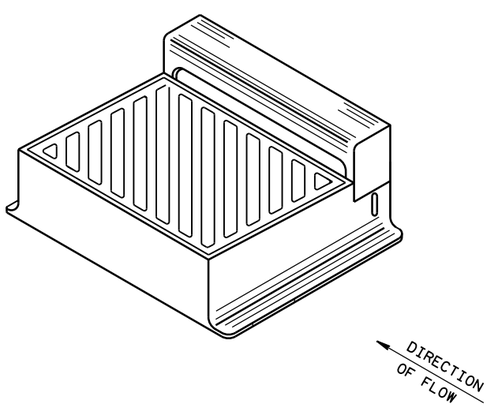

DIAGONAL SLOTS, SHALL BE ORIENTED TO THE DIRECTION OF FLOW AS ILLUSTRATED. GRATES ARE MANUFACTURED TO BE REVERSIBLE.

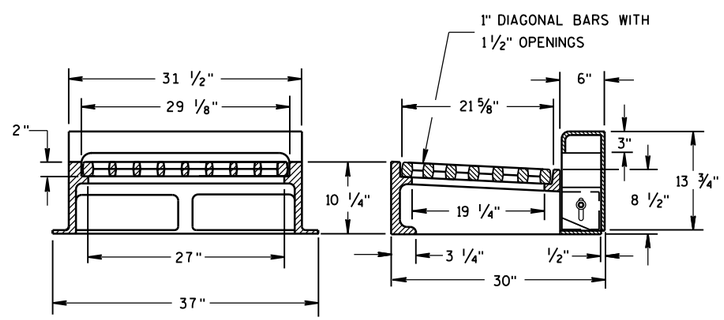

NOTE: CURB BOX HEIGHT ADJUSTABLE 6" TO 9"

TYPE "WM"

6

6

S.D.D. 8 A 5-19b

S.D.D. 8 A 5-19b

INLET COVERS
TYPE B, B-A, C,
MS, MS-A, & WM

STATE OF WISCONSIN
DEPARTMENT OF TRANSPORTATION

APPROVED

11/27/2013 — DATE

/S/ Jerry H. Zogg — ROADWAY STANDARDS DEVELOPMENT ENGINEER

FHWA

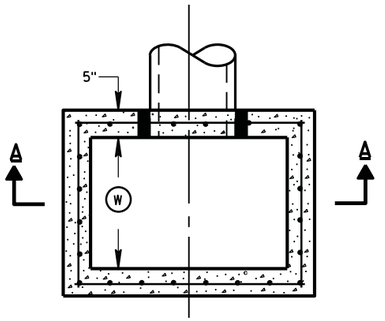

PLAN VIEW

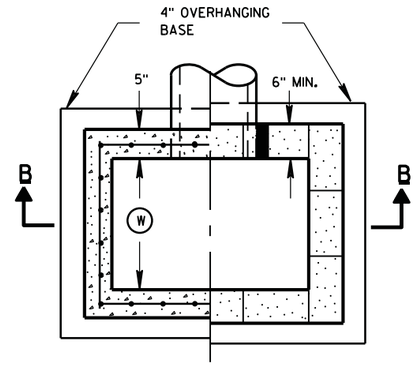

PLAN VIEW

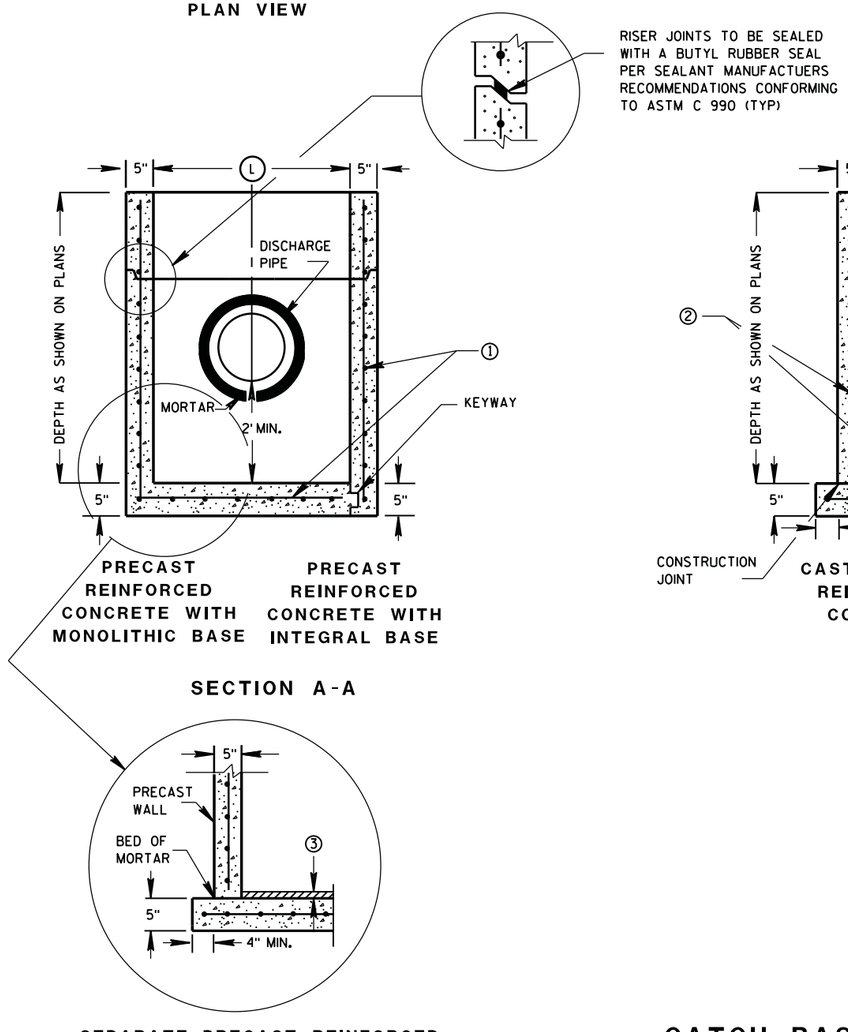

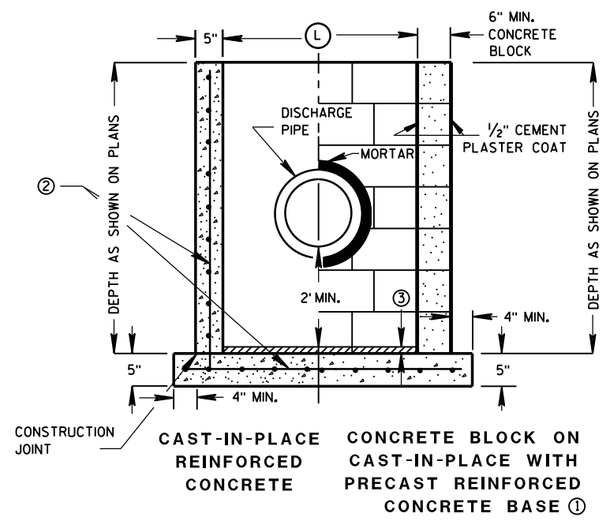

GENERAL NOTES

DETAILS OF CONSTRUCTION, MATERIALS AND WORKMANSHIP NOT SHOWN ON THIS DRAWING SHALL CONFORM TO THE PERTINENT REQUIREMENTS OF THE STANDARD SPECIFICATIONS AND THE APPLICABLE SPECIAL PROVISIONS.

UNLESS OTHERWISE AUTHORIZED IN WRITING BY THE ENGINEER, THE CONTRACTOR SHALL NOT ORDER AND DELIVER PRECAST CATCH BASIN UNITS REQUIRED FOR THE PROJECT UNTIL A LIST OF SIZES IS FURNISHED BY THE ENGINEER.

DETAILED DRAWINGS FOR PROPOSED ALTERNATE DESIGNS FOR UNDERGROUND DRAINAGE STRUCTURES SHALL BE SUBMITTED TO THE ENGINEER FOR APPROVAL PROVIDING THAT SUCH ALTERNATE DESIGNS MAKE PROVISION FOR EQUIVALENT CAPACITY AND STRENGTH.

ALL PRECAST CATCH BASIN UNITS SHALL CONFORM TO THE PERTINENT REQUIREMENTS OF ASTM C 913.

ALL DRAINAGE STRUCTURES ARE DESIGNATED ON THE PLANS AS "MANHOLES 3X3-L", "CATCH BASINS 4-B", "INLETS 2X3-H", ETC. THE FIRST NUMBERS DESIGNATES THE SIZE OF THE STRUCTURE, AND THE FOLLOWING LETTER DESIGNATES THE TYPE OF COVER TO BE USED TO COMPRISE THE COMPLETE UNIT.

BASES SHALL BE PLACED ON A BED OF MATERIAL AT LEAST 6 INCHES IN DEPTH, WHICH MEETS THE REQUIREMENTS OF GRANULAR BACKFILL. THIS BEDDING SHALL BE COMPACTED AND PROVIDE UNIFORM SUPPORT FOR THE ENTIRE AREA OF THE BASE.

ALL BAR STEEL REINFORCEMENT SHALL BE EMBEDDED 2 INCHES CLEAR UNLESS OTHERWISE SHOWN OR NOTED.

PRECAST REINFORCED RISERS SHALL HAVE A TONGUE AND GROOVE JOINT WITH TONGUE UP OR DOWN.

4" OVERHANGING BASES ARE REQUIRED FOR CAST-IN-PLACE REINFORCED CONCRETE AND CONCRETE BLOCK INSTALLATIONS.
4" OVERHANG IS REQUIRED WHEN SEPARATE PRECAST BASE IS PROVIDED.
OVERHANG IS NOT REQUIRED ON PRECAST STRUCTURES WITH AN INTEGRAL OR MONOLITHIC BASE.

MAXIMUM INSIDE PIPE DIAMETER DETERMINED BY 3" CLEARANCE ON EACH SIDE OF THE OUTSIDE WALL OF THE PIPE. SEE DETAIL "A". ASSUMES PIPE ENTERS PERPENDICULAR TO THE STRUCTURE.

① FOR PRECAST CATCH BASINS PROVIDE REINFORCING STEEL IN ACCORDANCE TO ASTM C 913.

② CONTRACTOR TO PROVIDE DRAWING(S) STAMPED BY A PROFESSIONAL ENGINEER FOR STEEL REINFORCING DESIGN FOR CAST-IN-PLACE STRUCTURES.

③ 1" CONCRETE KEY POURED AFTER INSTALLATION. 2' SUMP MEASURED FROM TOP OF KEY.

CATCH BASIN COVER MATRIX

CATCH BASIN SIZE		INLET COVER TYPE	F	ALL H'S
	WIDTH (W) (FT)	LENGTH (L) (FT)		
2X3-FT	2	3		X
2.5X3-FT	2.5	3	X	

PIPE MATRIX

CATCH BASIN SIZE	MAXIMUM INSIDE PIPE DIAMETER FOR TWO PIPES	
	WIDTH (IN)	LENGTH (IN)
2X3-FT	12	24
2.5X3-FT	18	24

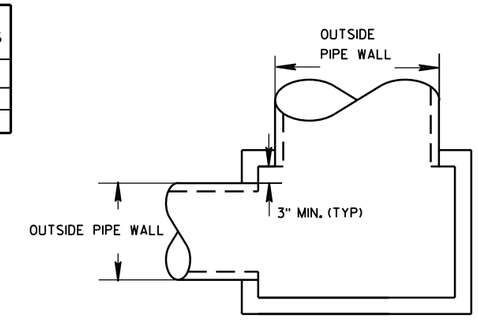

DETAIL "A"

CATCH BASINS 2X3-FT AND 2.5X3-FT

CATCH BASINS 2X3-FT AND 2.5X3-FT

STATE OF WISCONSIN
DEPARTMENT OF TRANSPORTATION

APPROVED
6/5/2012 — DATE
/S/ Jerry H. Zogg — ROADWAY STANDARDS DEVELOPMENT ENGINEER
FHWA

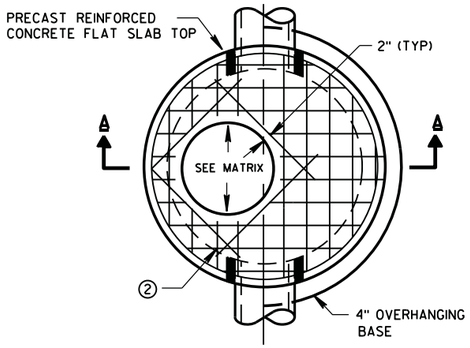

PLAN VIEW CIRCULAR OPENING

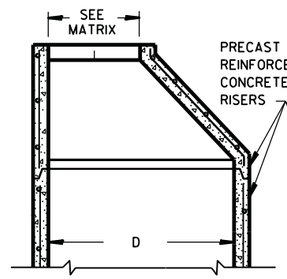

OPTIONAL PRECAST REINFORCED CONCRETE ECCENTRIC TOP

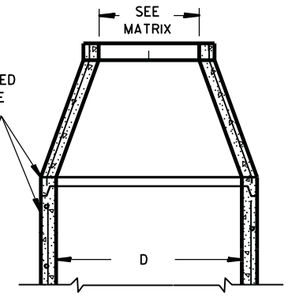

OPTIONAL PRECAST REINFORCED CONCRETE CONCENTRIC TOP

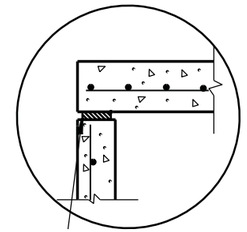

TOP WITH PLAIN END JOINT

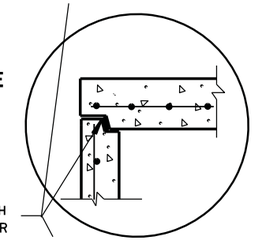

JOINTS TO BE SEALED WITH A BUTYL RUBBER SEAL PER SEALANT MANUFACTURERS RECOMMENDATIONS CONFORMING TO ASTM C990 (TYP)

TOP WITH TONGUE AND GROOVE JOINT

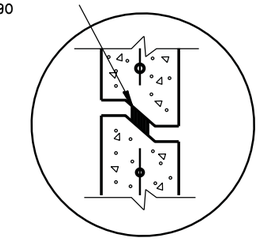

RISER WITH TONGUE AND GROOVE JOINT

DETAIL "B"

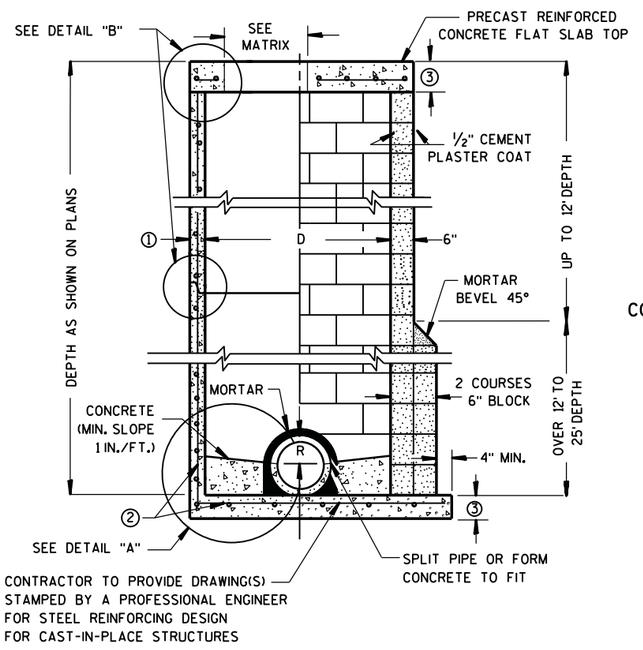

PRECAST REINFORCED CONCRETE WITH MONOLITHIC BASE

CONCRETE BLOCK WITH CAST-IN-PLACE OR PRECAST REINFORCED CONCRETE BASE ②

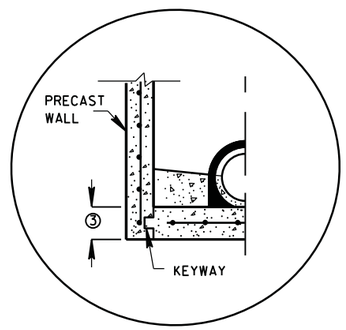

PRECAST REINFORCED CONCRETE WITH INTEGRAL BASE OPTION

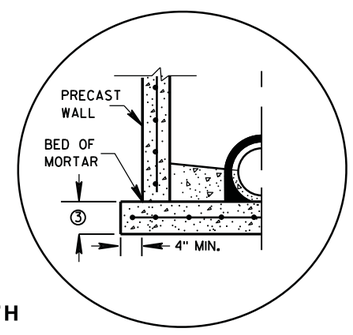

SEPARATE PRECAST REINFORCED CONCRETE BASE OPTION

DETAIL "A"

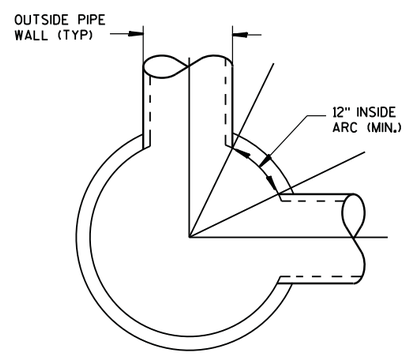

DETAIL "C"

GENERAL NOTES

DETAILS OF CONSTRUCTION, MATERIALS AND WORKMANSHIP NOT SHOWN ON THIS DRAWING SHALL CONFORM TO THE PERTINENT REQUIREMENTS OF THE STANDARD SPECIFICATIONS AND THE APPLICABLE SPECIAL PROVISIONS.

UNLESS OTHERWISE AUTHORIZED IN WRITING BY THE ENGINEER, THE CONTRACTOR SHALL NOT ORDER AND DELIVER PRECAST MANHOLE UNITS REQUIRED FOR THE PROJECT UNTIL A LIST OF SIZES IS FURNISHED BY THE ENGINEER.

DETAILED DRAWINGS FOR PROPOSED ALTERNATE DESIGNS FOR UNDERGROUND DRAINAGE STRUCTURES SHALL BE SUBMITTED TO THE ENGINEER FOR APPROVAL PROVIDING THAT SUCH ALTERNATE DESIGNS MAKE PROVISION FOR EQUIVALENT CAPACITY AND STRENGTH.

ALL DRAINAGE STRUCTURES ARE DESIGNATED ON THE PLANS AS "MANHOLES 3X3-L", "CATCH BASINS 4-B", "INLETS 2X3-H", ETC. THE FIRST NUMBERS DESIGNATE THE SIZE OF THE STRUCTURE, AND THE FOLLOWING LETTER DESIGNATES THE TYPE OF COVER TO BE USED TO COMPRISE THE COMPLETE UNIT.

BASES SHALL BE PLACED ON A BED OF MATERIAL AT LEAST 6 INCHES IN DEPTH, WHICH MEETS THE REQUIREMENTS OF GRANULAR BACKFILL. THIS BEDDING SHALL BE COMPACTED AND PROVIDE UNIFORM SUPPORT FOR THE ENTIRE AREA OF THE BASE.

PRECAST REINFORCED CONE TOPS (ECCENTRIC OR CONCENTRIC) OR PRECAST REINFORCED FLAT SLAB TOPS MAY BE USED ON CONCRETE BLOCK STRUCTURES. THE CONE TOPS SHALL BE INSTALLED ON A BED OF MORTAR.

ECCENTRIC CONE TOPS MAY BE USED ON ALL STRUCTURES, AND CONCENTRIC CONE TOPS SHALL BE USED ONLY ON STRUCTURES 5 FEET OR LESS IN DEPTH, UNLESS OTHERWISE DIRECTED BY THE ENGINEER.

STEPS MEETING AASHTO M199 AND THE FOLLOWING REQUIREMENTS SHALL BE INSTALLED IN ALL STRUCTURES OVER 5 FEET IN DEPTH: 16 INCH C-C MAXIMUM SPACING; PROJECT A MINIMUM CLEAR DISTANCE OF 4 INCHES FROM THE WALL AT THE POINT OF EMBEDMENT; MINIMUM LENGTH OF 10 INCHES; MINIMUM WALL EMBEDMENT OF 3 INCHES. FERROUS METAL STEPS NOT PAINTED OR TREATED TO RESIST CORROSION SHALL HAVE A MINIMUM CROSS SECTIONAL DIMENSION OF 1 INCH.

STEPS OF APPROVED POLYPROPYLENE PLASTIC COATED REINFORCEMENT BAR ARE ACCEPTABLE. REINFORCING BAR MUST BE A MINIMUM OF ½" AND MEET THE REQUIREMENTS OF ASTM A615.

CERTIFICATION SHALL BE PROVIDED THAT INSTALLED STEPS WHEN TESTED IN ACCORDANCE WITH SECTION 10 OF AASHTO T280 CAN WITHSTAND A VERTICAL LOAD OF 800 LBS. AND A HORIZONTAL LOAD OF 400 LBS.

ALL BAR STEEL REINFORCEMENT SHALL BE EMBEDDED 2 INCHES CLEAR UNLESS OTHERWISE SHOWN OR NOTED.

CONCRETE BLOCK WILL NOT BE PERMITED FOR STRUCTURES GREATER THAN 4 FEET IN DIAMETER.

PRECAST REINFORCED RISERS SHALL HAVE A TONGUE AND GROOVE JOINT WITH TONGUE UP OR DOWN.

ALL PRECAST MANHOLE UNITS SHALL CONFORM TO THE PERTINENT REQUIREMENTS OF AASHTO DESIGNATION M 199.

4" OVERHANGING BASES ARE REQUIRED FOR ALL CONCRETE BLOCK INSTALLATIONS. 4" OVERHANG IS REQUIRED WHEN SEPARATE PRECAST BASE IS PROVIDED. OVERHANG IS NOT REQUIRED ON PRECAST STRUCTURES WITH AN INTEGRAL OR MONOLITHIC BASE.

FOR ADDITIONAL CONFIGURATIONS, MAINTAIN A MINIMUM OF 12 INCHES AS MEASURED FROM THE INSIDE OF THE STRUCTURE WALL BETWEEN THE OUTSIDE PIPE WALLS OF ADJACENT PIPES. SEE DETAIL "C".

① MINIMUM WALL THICKNESS SHALL BE 4 INCHES FOR 3-FT, 5 INCHES FOR 4-FT, 6 INCHES FOR 5-FT, 7 INCHES FOR 6-FT, 8 INCHES FOR 7-FT AND 9 INCHES FOR 8-FT DIAMETER PRECAST MANHOLES.

② FOR PRECAST MANHOLES PROVIDE REINFORCING STEEL IN ACCORDANCE TO AASHTO M199.

③ PRECAST FLAT SLAB TOPS AND BASES WITH A DIAMETER OF 48" AND LESS SHALL HAVE A MINIMUM THICKNESS OF 6". PRECAST FLAT SLAB TOPS AND BASES WITH A DIAMETER LARGER THAN 48" SHALL HAVE A MINIMUM THICKNESS OF 8".

MANHOLE COVER OPENING MATRIX

MANHOLE COVER TYPE	C	ALL J'S	K	L	M
OPENING SIZE (FT)					
2 DIA.	X	X		X	
3 DIA.			X		X

PIPE MATRIX

MANHOLE SIZE	MAXIMUM INSIDE PIPE DIAMETER FOR TWO PIPES	
	180° SEPARATION (IN)	90° SEPARATION (IN)
3-FT	15	12
4-FT	24	18
5-FT	36	24
6-FT	42	36
7-FT	48	36
8-FT	60	42

MANHOLES 3-FT, 4-FT, 5-FT, 6-FT, 7-FT AND 8-FT DIAMETER

STATE OF WISCONSIN
DEPARTMENT OF TRANSPORTATION

APPROVED
6/5/2012 — DATE
/S/ Jerry H. Zogg — ROADWAY STANDARDS DEVELOPMENT ENGINEER
FHWA

MANHOLES 3-FT, 4-FT, 5-FT, 6-FT, 7-FT AND 8-FT DIAMETER

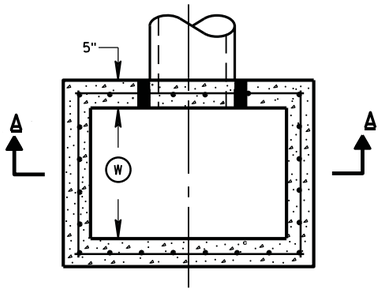

PLAN VIEW

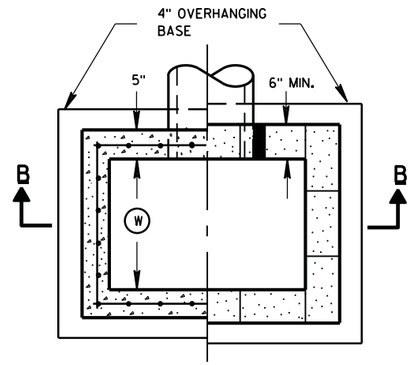

PLAN VIEW

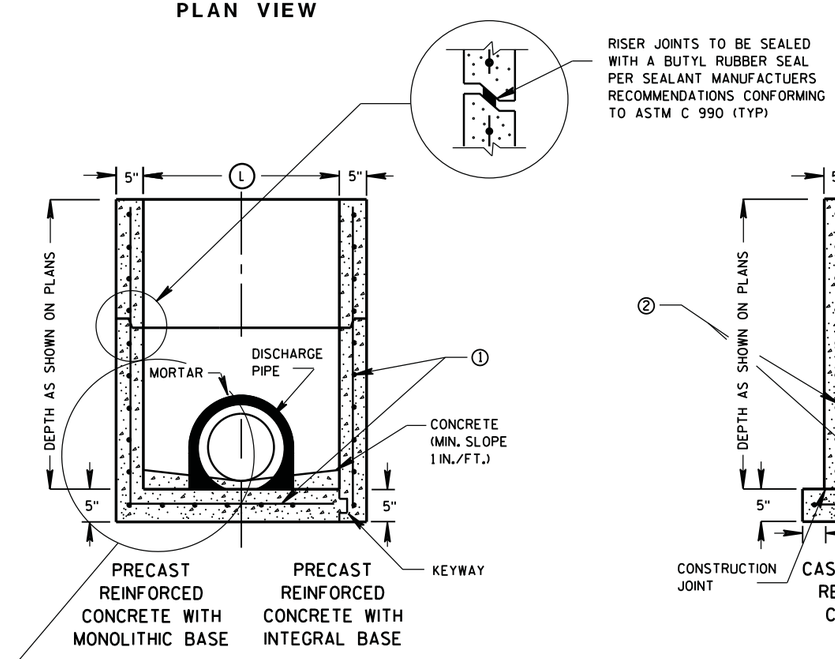

SECTION A-A

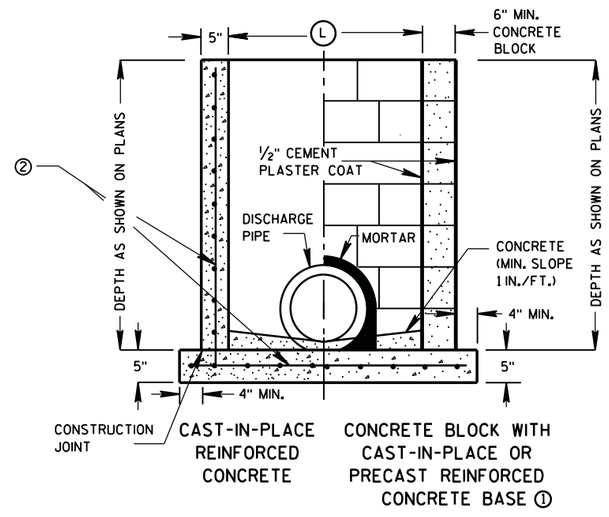

SECTION B-B

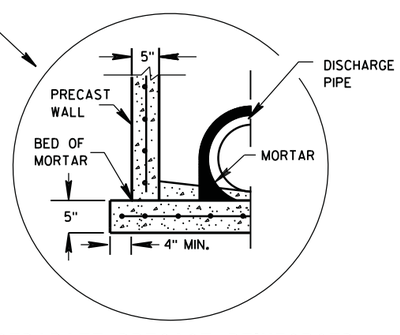

SEPARATE PRECAST REINFORCED CONCRETE BASE OPTION

GENERAL NOTES

DETAILS OF CONSTRUCTION, MATERIALS AND WORKMANSHIP NOT SHOWN ON THIS DRAWING SHALL CONFORM TO THE PERTINENT REQUIREMENTS OF THE STANDARD SPECIFICATIONS AND THE APPLICABLE SPECIAL PROVISIONS.

UNLESS OTHERWISE AUTHORIZED IN WRITING BY THE ENGINEER, THE CONTRACTOR SHALL NOT ORDER AND DELIVER PRECAST INLET UNITS REQUIRED FOR THE PROJECT UNTIL A LIST OF SIZES IS FURNISHED BY THE ENGINEER.

DETAILED DRAWINGS FOR PROPOSED ALTERNATE DESIGNS FOR UNDERGROUND DRAINAGE STRUCTURES SHALL BE SUBMITTED TO THE ENGINEER FOR APPROVAL PROVIDING THAT SUCH ALTERNATE DESIGNS MAKE PROVISION FOR EQUIVALENT CAPACITY AND STRENGTH.

ALL PRECAST INLET UNITS SHALL CONFORM TO THE PERTINENT REQUIREMENTS OF ASTM C 913.

ALL DRAINAGE STRUCTURES ARE DESIGNATED ON THE PLANS AS "MANHOLES 3X3-L", "CATCH BASINS 4-B", "INLETS 2X3-H", ETC. THE FIRST NUMBERS DESIGNATES THE SIZE OF THE STRUCTURE, AND THE FOLLOWING LETTER DESIGNATES THE TYPE OF COVER TO BE USED TO COMPRISE THE COMPLETE UNIT.

BASES SHALL BE PLACED ON A BED OF MATERIAL AT LEAST 6 INCHES IN DEPTH, WHICH MEETS THE REQUIREMENTS OF GRANULAR BACKFILL. THIS BEDDING SHALL BE COMPACTED AND PROVIDE UNIFORM SUPPORT FOR THE ENTIRE AREA OF THE BASE.

ALL BAR STEEL REINFORCEMENT SHALL BE EMBEDDED 2 INCHES CLEAR UNLESS OTHERWISE SHOWN OR NOTED.

PRECAST REINFORCED RISERS SHALL HAVE A TONGUE AND GROOVE JOINT WITH TONGUE UP OR DOWN.

4" OVERHANGING BASES ARE REQUIRED FOR CAST-IN-PLACE REINFORCED CONCRETE AND CONCRETE BLOCK INSTALLATIONS.
4" OVERHANG IS REQUIRED WHEN SEPARATE PRECAST BASE IS PROVIDED.
OVERHANG IS NOT REQUIRED ON PRECAST STRUCTURES WITH AN INTEGRAL OR MONOLITHIC BASE.

MAXIMUM INSIDE PIPE DIAMETER DETERMINED BY 3 INCH CLEARANCE ON EACH SIDE OF THE OUTSIDE WALL OF THE PIPE. SEE DETAIL "A". ASSUMES PIPE ENTERS PERPENDICULAR TO THE STRUCTURE.

① FOR PRECAST INLETS PROVIDE REINFORCING STEEL IN ACCORDANCE TO ASTM C 913.

② CONTRACTOR TO PROVIDE DRAWING(S) STAMPED BY A PROFESSIONAL ENGINEER FOR STEEL REINFORCING DESIGN FOR CAST-IN-PLACE STRUCTURES.

INLET COVER MATRIX

INLET SIZE		INLET COVER TYPE	ALL A'S	ALL B'S	BW	F	ALL H'S	S	T	V	WM
	WIDTH (W) (FT)	LENGTH (L) (FT)									
2X2-FT	2	2	X	X				X		X	
2X2.5-FT	2	2.5			X			X	X	X	X
2X3-FT	2	3					X				
2.5X3-FT	2.5	3				X					

PIPE MATRIX

INLET SIZE	MAXIMUM INSIDE PIPE DIAMETER	
	WIDTH (IN)	LENGTH (IN)
2X2-FT	12	12
2X2.5-FT	12	18
2X3-FT	12	24
2.5X3-FT	18	24

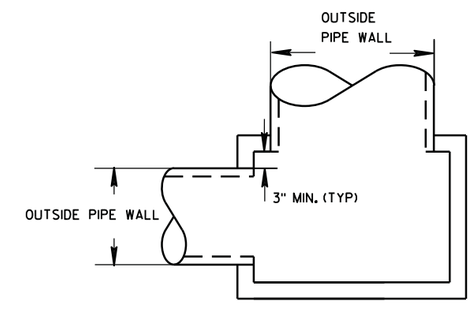

DETAIL "A"

INLETS 2X2-FT, 2X2.5-FT, 2X3-FT AND 2.5X3-FT

INLETS 2X2-FT, 2X2.5-FT, 2X3-FT AND 2.5X3-FT

STATE OF WISCONSIN
DEPARTMENT OF TRANSPORTATION

APPROVED
6/5/2012 — DATE
/S/ Jerry H. Zogg — ROADWAY STANDARDS DEVELOPMENT ENGINEER
FHWA

8C8: Inlets Median 1 & 2 Grate

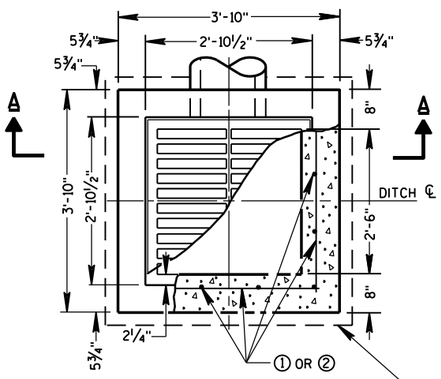

PLAN VIEW

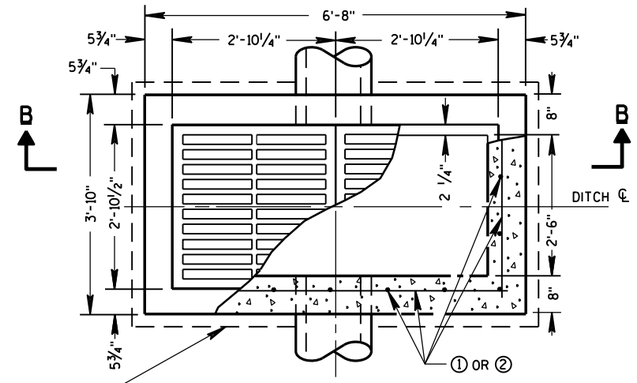

PLAN VIEW

4" OVERHANGING BASE ON REINFORCED CAST-IN-PLACE CONCRETE INLETS

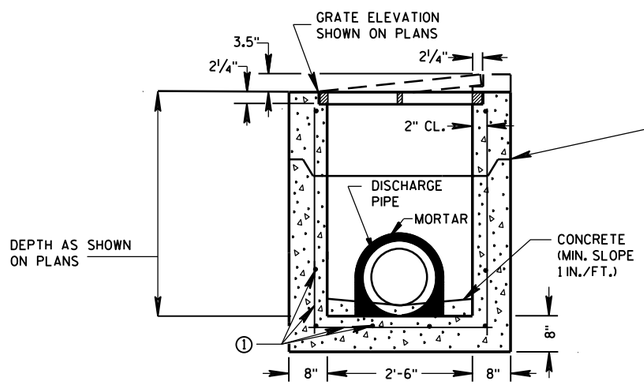

PRECAST REINFORCED CONCRETE SECTION A-A

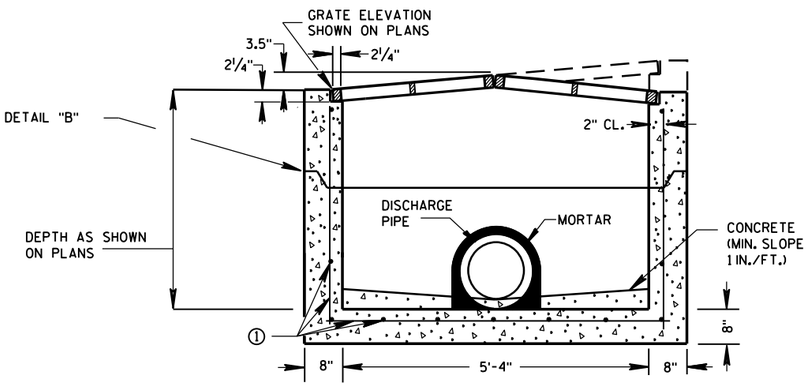

PRECAST REINFORCED CONCRETE SECTION B-B

GENERAL NOTES

DETAILS OF CONSTRUCTION, MATERIALS AND WORKMANSHIP NOT SHOWN ON THIS DRAWING SHALL CONFORM TO THE PERTINENT REQUIREMENTS OF THE STANDARD SPECIFICATIONS AND THE APPLICABLE SPECIAL PROVISIONS.

UNLESS OTHERWISE AUTHORIZED IN WRITING BY THE ENGINEER, THE CONTRACTOR SHALL NOT ORDER AND DELIVER PRECAST INLET UNITS REQUIRED FOR THE PROJECT UNTIL A LIST OF SIZES IS FURNISHED BY THE ENGINEER.

DETAILED DRAWINGS FOR PROPOSED ALTERNATE DESIGNS FOR INLETS WHICH MAY INCLUDE PRECAST REINFORCED CONCRETE INLETS, SHALL BE SUBMITTED TO THE ENGINEER FOR APPROVAL PROVIDING THAT SUCH ALTERNATE DESIGNS MAKE PROVISION FOR EQUIVALENT CAPACITY AND STRENGTH.

ALL MEDIAN INLETS ARE DESIGNATED ON THE PLANS AS "INLETS, 1G-MS", ETC. THE FIRST NUMBER AND LETTER DESIGNATE THE TYPE OF STRUCTURE, AND THE FOLLOWING LETTERS DESIGNATE THE TYPE OF COVER TO BE USED TO COMPRISE THE COMPLETE UNIT.

ALL BAR STEEL REINFORCEMENT SHALL BE EMBEDDED 2 INCHES CLEAR UNLESS OTHERWISE SHOWN OR NOTED.

PRECAST REINFORCED RISERS SHALL HAVE A TONGUE AND GROOVE JOINT WITH TONGUE UP OR DOWN.

ALL PRECAST INLET UNITS SHALL CONFORM TO THE PERTINENT REQUIREMENTS OF ASTM C 913.

MAXIMUM INSIDE PIPE DIAMETER DETERMINED BY 3" CLEARANCE ON EACH SIDE OF THE OUTSIDE WALL OF THE PIPE. SEE DETAIL "A". ASSUMES PIPE ENTERS PERPENDICULAR TO THE STRUCTURE.

① FOR PRECAST INLETS PROVIDE REINFORCING STEEL IN ACCORDANCE TO ASTM C 913.

② CONTRACTOR TO PROVIDE DRAWING(S) STAMPED BY A PROFESSIONAL ENGINEER FOR STEEL REINFORCING DESIGN FOR CAST-IN-PLACE STRUCTURES.

PIPE MATRIX

	MAXIMUM INSIDE PIPE DIAMETER	
INLET SIZE	WIDTH (IN)	LENGTH (IN)
1 GRATE	18	18
2 GRATE	18	42

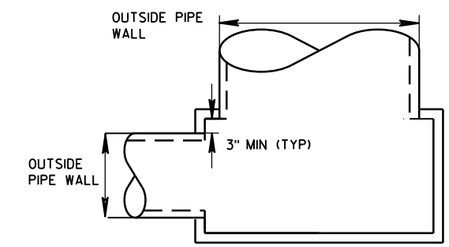

DETAIL "A"

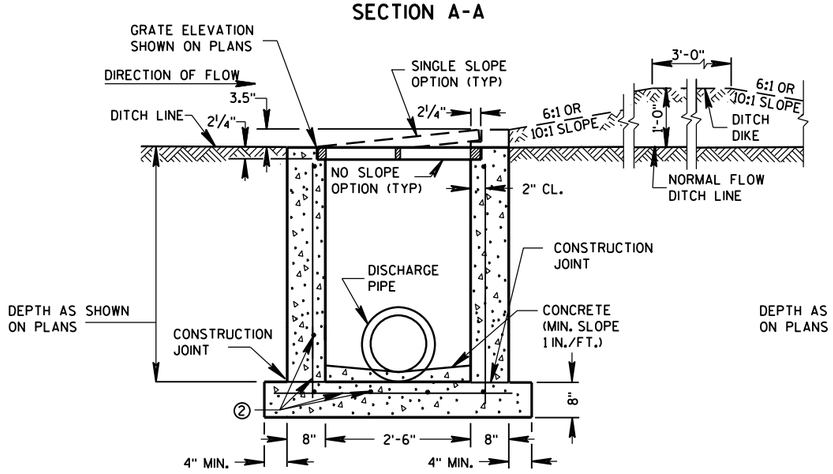

REINFORCED CAST-IN-PLACE CONCRETE SECTION A-A

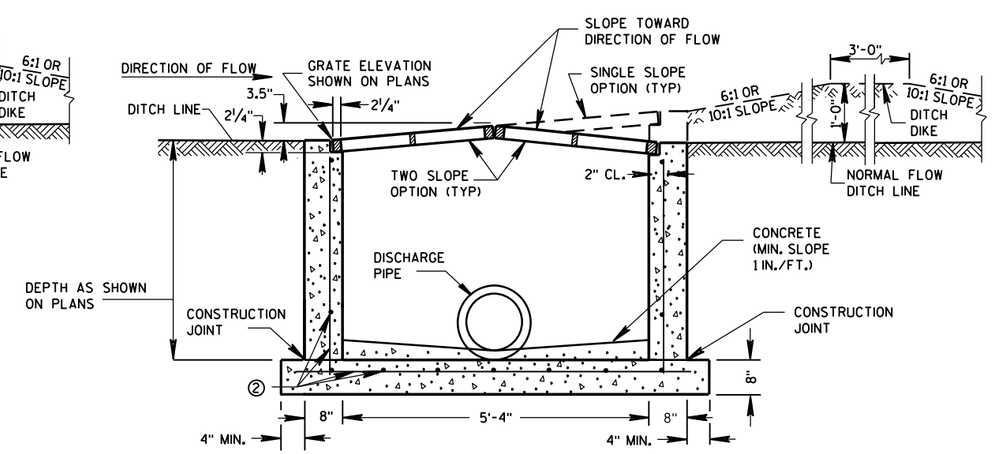

REINFORCED CAST-IN-PLACE CONCRETE SECTION B-B

JOINTS TO BE SEALED WITH A BUTYL RUBBER SEAL PER SEALANT MANUFACTURERS RECOMMENDATIONS CONFORMING TO ASTM C 990 (TYP)

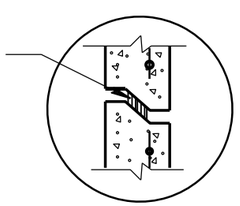

DETAIL "B"

INLETS MEDIAN 1 GRATE

INLETS MEDIAN 2 GRATE

INLETS MEDIAN 1 AND 2 GRATE

STATE OF WISCONSIN
DEPARTMENT OF TRANSPORTATION

APPROVED
6/5/2012 — DATE
/S/ Jerry H. Zogg — ROADWAY STANDARDS DEVELOPMENT ENGINEER
FHWA

6

6

S.D.D. 8 C 8-1

S.D.D. 8 C 8-1

8D1: Concrete Curb, Concrete Curb & Gutter and Ties

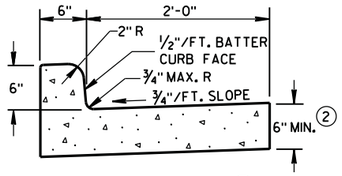

TYPES A & D ①

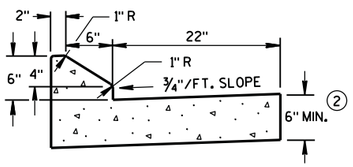

6" SLOPED CURB TYPES G & J ①

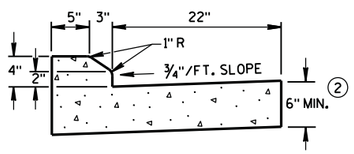

4" SLOPED CURB TYPES G & J ①

CONCRETE CURB & GUTTER 30"

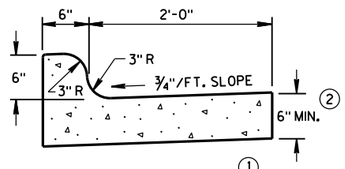

TYPES K & L ①

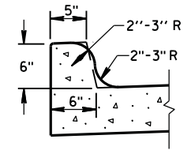

OPTIONAL CURB SHAPE FOR TYPES K & L ①

CONCRETE CURB & GUTTER 30"

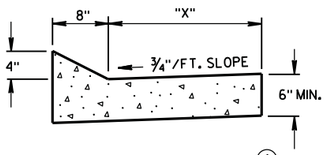

TYPES TBT & TBTT ①

CONCRETE CURB & GUTTER

TBT & TBTT	"X"
30"	22"
36"	28"

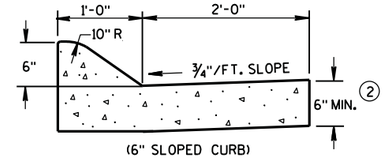

(6" SLOPED CURB)

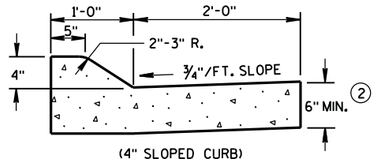

(4" SLOPED CURB)

TYPES A & D ①

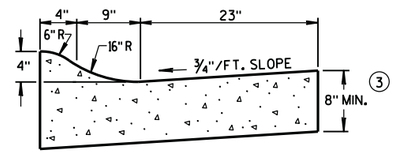

4" SLOPED CURB TYPES R & T ① ④

CONCRETE CURB & GUTTER 36"

GENERAL NOTES

DETAILS OF CONSTRUCTION, MATERIALS AND WORKMANSHIP NOT SHOWN ON THIS DRAWING SHALL CONFORM TO THE PERTINENT REQUIREMENTS OF THE CONTRACT.

PAVEMENT TIES AND TIE BARS SHALL BE EPOXY COATED IN CONFORMANCE WITH SUBSECTION 505.2.6.2 OF THE STANDARD SPECIFICATIONS.

INTEGRAL CURB & GUTTER SHALL CONFORM TO THE DETAILS SHOWN FOR CONCRETE CURB & GUTTER INCLUDING THE TRANSVERSE GUTTER SLOPE. A LONGITUDINAL CONSTRUCTION JOINT IS NOT REQUIRED WITH INTEGRAL CURB AND GUTTER.

WHERE THE TRANSVERSE JOINTS IN THE PAVEMENT ARE REQUIRED TO BE SEALED, THE JOINTS IN THE INTEGRAL CURB AND GUTTER SHALL BE SEALED TO THE FACE OF CURB WITH THE SAME TYPE OF SEALANT. THE COST OF FURNISHING AND INSTALLING THIS SEALANT SHALL BE INCIDENTAL TO THE ITEM CONCRETE CURB AND GUTTER.

UNLESS OTHERWISE SHOWN ON THE TYPICAL CROSS SECTIONS, THE BASE AGGREGATE AND COMMON EXCAVATION LIMITS ARE 2'-0" BEHIND THE BACK OF CURBS.

① TIE BARS ARE REQUIRED FOR CURB AND GUTTER TYPES A, G, K, R AND TBTT.

② THE BOTTOM OF CURB AND GUTTER MAY BE CONSTRUCTED EITHER LEVEL OR PARALLEL TO THE SLOPE OF THE SUBGRADE OR BASE AGGREGATE PROVIDED A 6" MINIMUM GUTTER THICKNESS IS MAINTAINED.

③ THE BOTTOM OF CURB AND GUTTER MAY BE CONSTRUCTED EITHER LEVEL OR PARALLEL TO THE SLOPE OF THE SUBGRADE OR BASE AGGREGATE PROVIDED A 8" MINIMUM GUTTER THICKNESS IS MAINTAINED.

④ THE FACE OF CURB IS 6" FROM THE BACK OF CURB.

⑤ WHEN REVERSE SLOPE GUTTER IS REQUIRED, THE LOCATION(S) WILL BE SHOWN ELSEWHERE IN THE PLAN.

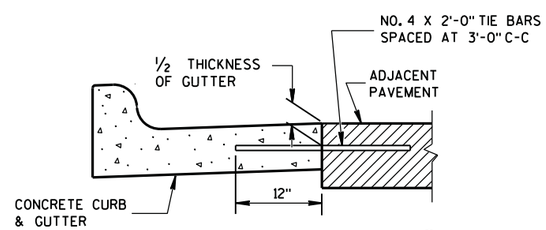

TYPICAL TIE BAR LOCATION ①

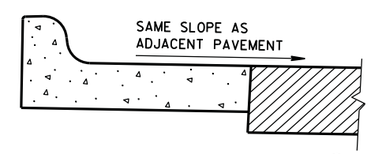

REVERSE SLOPE GUTTER ⑤
(TYPICAL FOR ALL CURB & GUTTER TYPES)

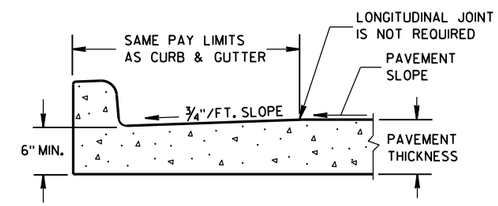

PARTIAL SECTION OF PAVEMENT WITH INTEGRAL CURB & GUTTER

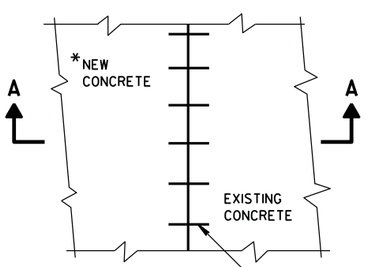

*NEW CURB & GUTTER, SURFACE DRAINS, CONCRETE PAVEMENT OR OTHER NEW CONCRETE.

PLAN VIEW

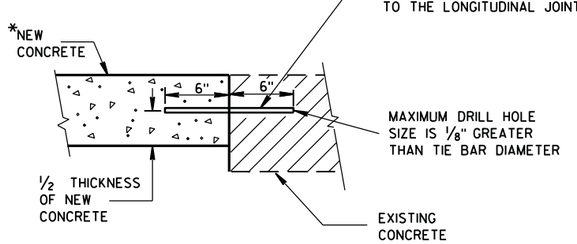

SECTION A-A

TIE BARS DRILLED INTO EXISTING PAVEMENT

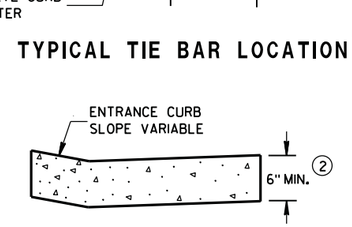

DRIVEWAY ENTRANCE CURB
(WHEN DIRECTED BY THE ENGINEER)

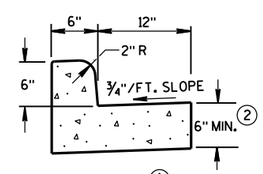

① TYPES A & D

CONCRETE CURB & GUTTER 18"

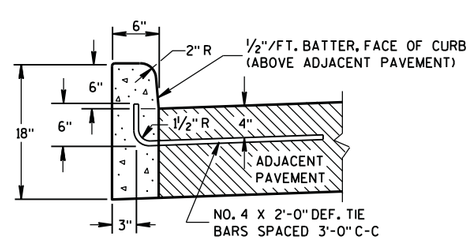

① TYPES A & D

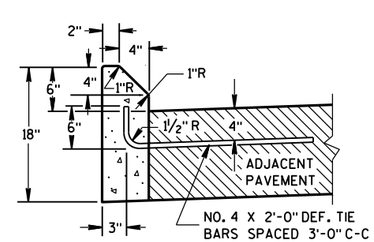

① TYPES G & J

CONCRETE CURB

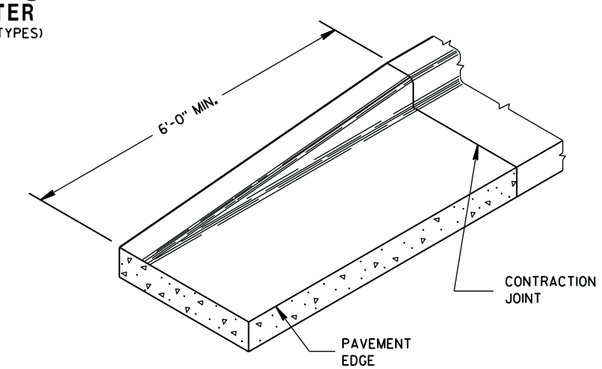

END SECTION CURB & GUTTER

CONCRETE CURB, CONCRETE CURB & GUTTER AND TIES

STATE OF WISCONSIN
DEPARTMENT OF TRANSPORTATION

APPROVED
June, 2015 — DATE
/S/ Jerry H. Zogg — ROADWAY STANDARDS DEVELOPMENT ENGINEER
FHWA

ASPHALTIC FLUME

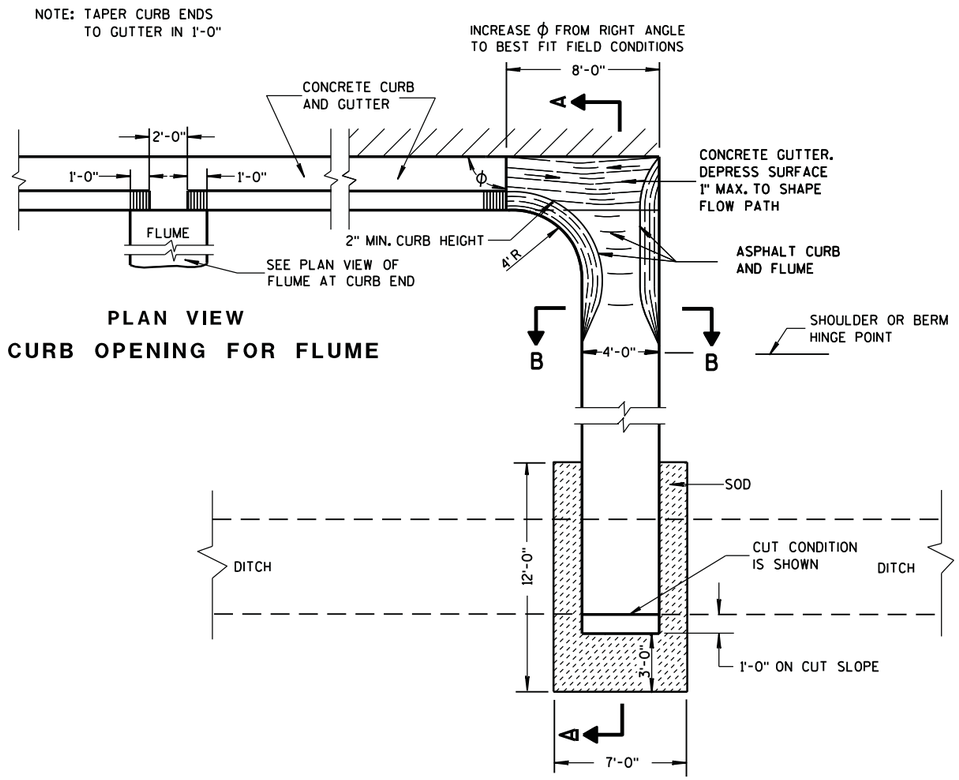

PLAN VIEW
CURB OPENING FOR FLUME

PLAN VIEW
FLUME AT CURB END

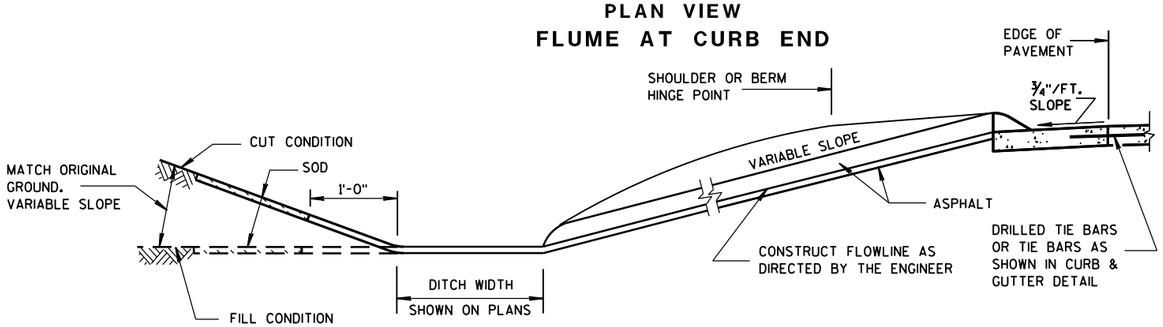

SECTION A-A

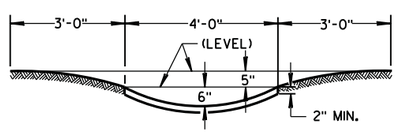

SECTION B-B

GENERAL NOTES

DETAILS OF CONSTRUCTION, MATERIALS AND WORKMANSHIP NOT SHOWN ON THIS DRAWING SHALL CONFORM TO PERTINENT REQUIREMENTS OF THE STANDARD SPECIFICATIONS AND APPLICABLE SPECIAL PROVISIONS.

WELDED STEEL WIRE FABRIC SHALL BE IN ACCORDANCE WITH AASHTO SPECIFICATION M55.

① JOINTS SHALL BE 1/8 TO 1/4 INCH WIDE BY 1 1/2 INCHES DEEP AND SPACED AT UNIFORM INTERVALS OF APPROXIMATELY 4 FEET.

② GEOTEXTILE FABRIC TYPE "R" SHALL UNDERLAY THE FULL LENGTH AND WIDTH OF THE CONCRETE SURFACE DRAIN AND RIPRAP.

③ CONCRETE SURFACE DRAIN WITHOUT CURB AND GUTTER MAY BE USED ON BACKSLOPES WHEN SPECIFIED

③ CONCRETE SURFACE DRAIN

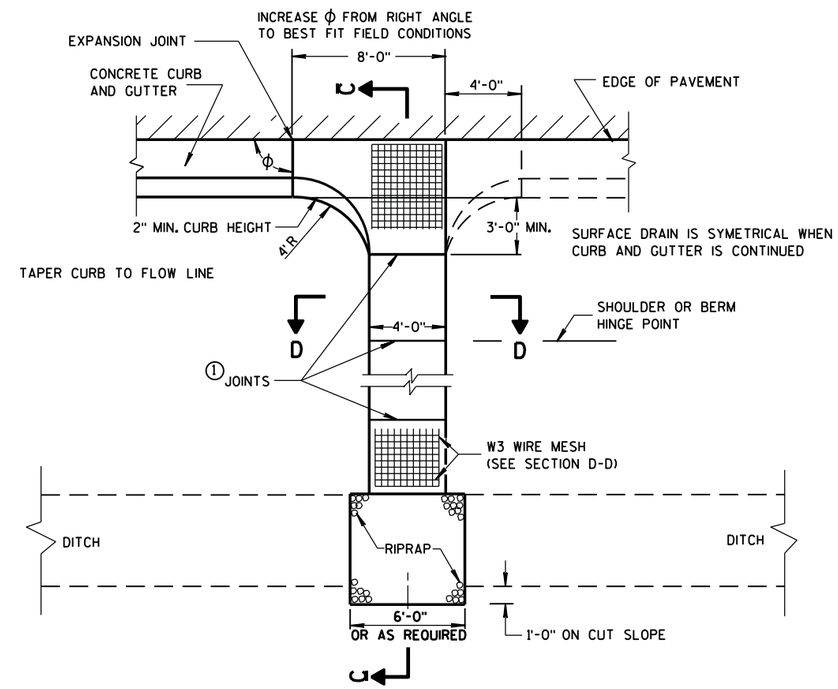

PLAN VIEW

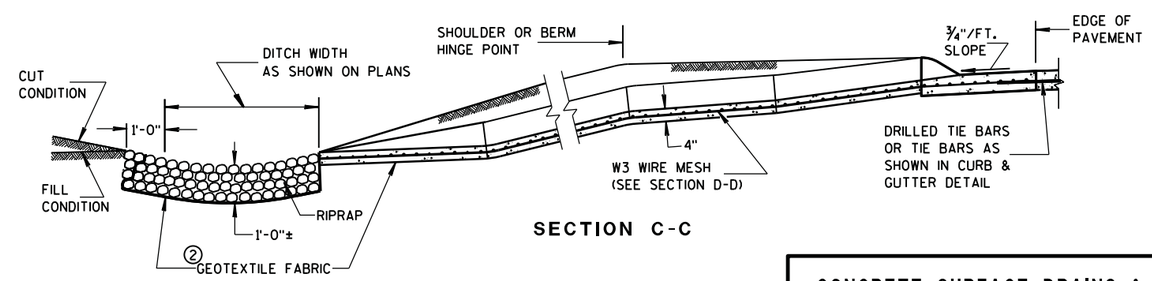

SECTION C-C

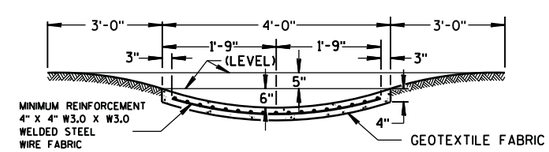

SECTION D-D

CONCRETE SURFACE DRAINS & ASPHALTIC FLUMES	
STATE OF WISCONSIN DEPARTMENT OF TRANSPORTATION	
APPROVED	
9/4/08 DATE	/S/ Jerry H. Zogg ROADWAY STANDARDS DEVELOPMENT ENGINEER
FHWA	

6

6

S.D.D. 8 D 4-5

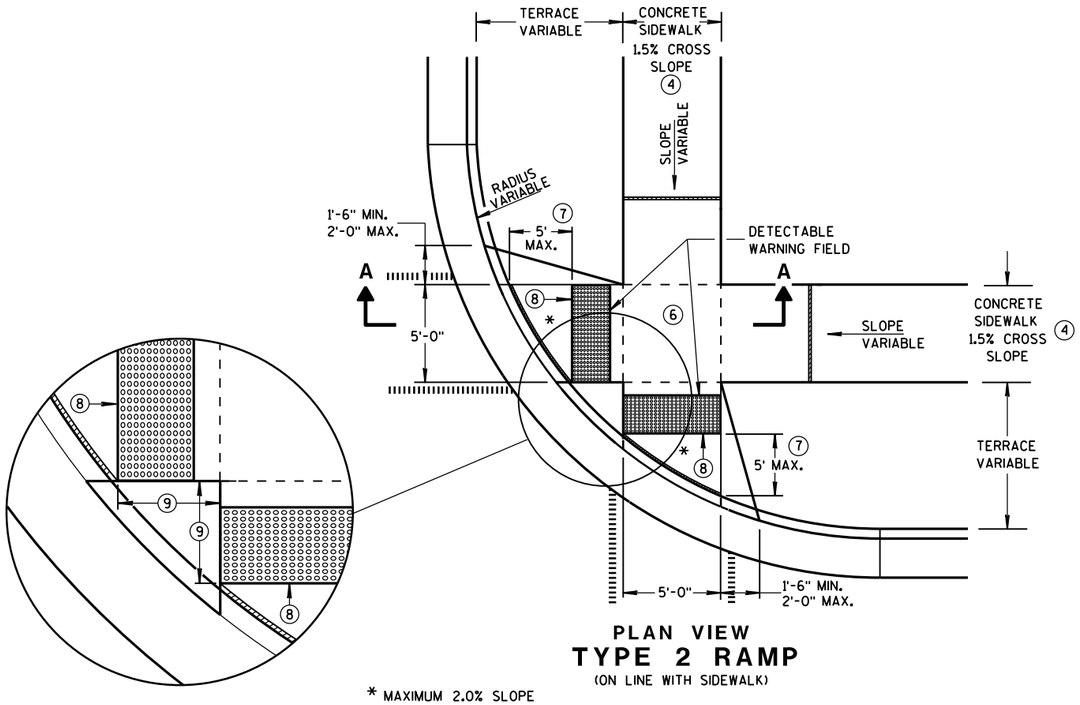

PLAN VIEW
TYPE 2 RAMP
(ON LINE WITH SIDEWALK)

* MAXIMUM 2.0% SLOPE IN ALL DIRECTIONS IN FRONT OF GRADE BREAK

GENERAL NOTES

USE THE TYPE 3 RAMP ONLY WHEN A TYPE 1 OR TYPE 2 CANNOT BE ACHIEVED BECAUSE OF FIELD CONDITIONS.

DETECTABLE WARNING FIELDS THAT ARE INSTALLED AS A GROUP OR SIDE BY SIDE, SHALL BE FROM THE SAME MANUFACTURER.

(2) GRADE CHANGE BETWEEN GUTTER FLAG SLOPE AND THE CURB RAMP SLOPE SHALL NOT EXCEED 11%. MAXIMUM GUTTER FLAG SLOPE IS 4%. PROVIDE DRAINAGE AWAY FROM CURB RAMP AT GUTTER FLAG INTERFACE. NO VERTICAL LIPS OR DISCONTINUITIES GREATER THAN 1/4-INCH ARE ALLOWED.

(3) ABSOLUTE MAXIMUM 12H:1V (8.33%) CURB RAMP SLOPE IS ALLOWABLE WITH FLATTENED GUTTER FLAG SLOPE AND NOT TO EXCEED 11% GRADE CHANGE.

(4) ±0.5% CONSTRUCTION TOLERANCE IN SIDEWALK CROSS SLOPE. THE SIDEWALK CROSS SLOPE SHALL NOT EXCEED 2% WITHOUT PRIOR APPROVAL FROM THE ENGINEER.

(6) PROVIDE A LEVEL LANDING (MAXIMUM 2% SLOPE) IN ANY DIRECTION OF PEDESTRIAN TRAVEL. STANDARD LANDING SIZE IS 5 FEET X 5 FEET (MINIMUM 4 FEET X 4 FEET).

(7) WHEN THIS DISTANCE EXCEEDS 5 FEET, USE MULTIPLE DETECTABLE WARNING PANELS ACROSS THE RAMP AND STAGGER ADDITIONAL DETECTABLE WARNING PANEL(S) FORWARD TO REDUCE THIS DISTANCE.

(8) PROVIDE GRADE BREAK PERPENDICULAR TO DIRECTION OF WHEELCHAIR TRAVEL.

(9) WHEN THIS DISTANCE IS LESS THAN 6'-0", IT MAY BE DIFFICULT TO ACHIEVE A 7% SLOPE OR FLATTER ALONG THE RAMP. REDUCE CURB HEIGHT IN TRIANGLE AREA TO ACHIEVE 7% SLOPE OR FLATTER ON RAMP. 2" MINIMUM CURB HEIGHT.

LEGEND

- ½" EXPANSION JOINT-SIDEWALK
- CONTRACTION JOINT FIELD LOCATED
- PAVEMENT MARKING CROSSWALK (WHITE)
- ALTERNATIVE LAYOUT

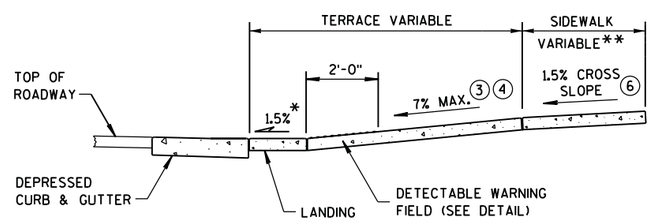

SECTION A-A

** WIDTH SHOWN ELSEWHERE IN THE PLANS

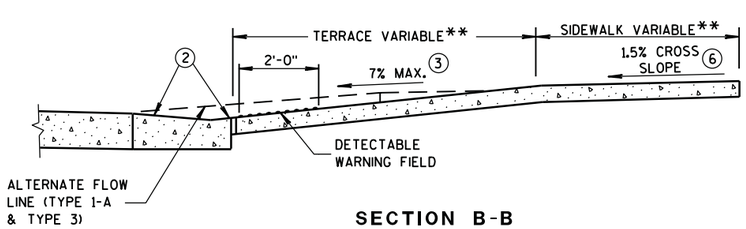

SECTION B-B

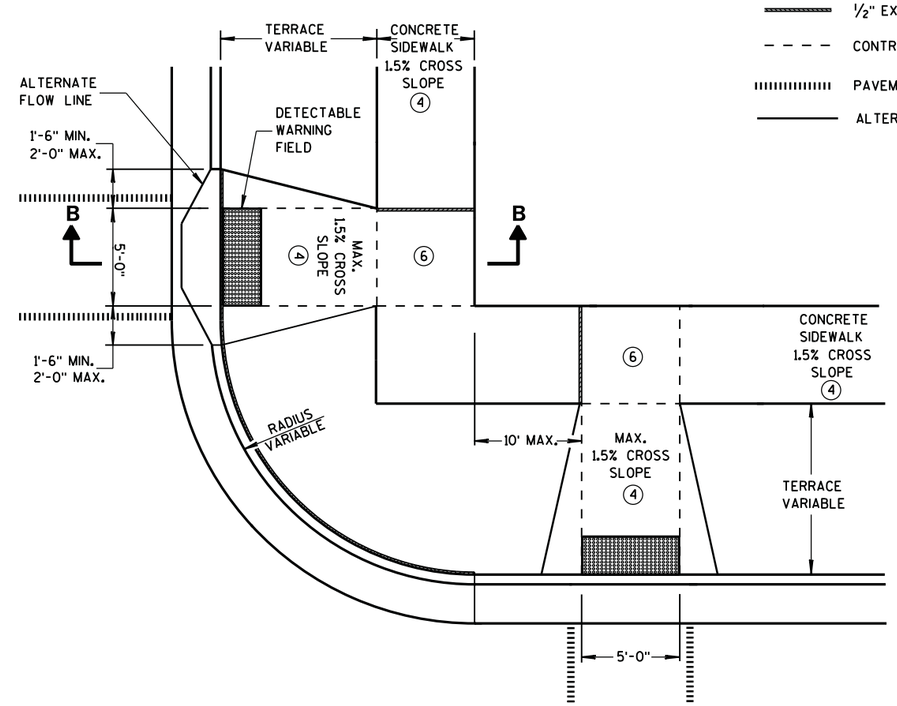

PLAN VIEW
TYPE 3 RAMP
(OUTSIDE OF CROSSWALK AREA)

CURB RAMPS
TYPES 2 AND 3

STATE OF WISCONSIN
DEPARTMENT OF TRANSPORTATION

8D5 sheet e: Curb Ramps Type 5, 6, 7A, 7B & 8

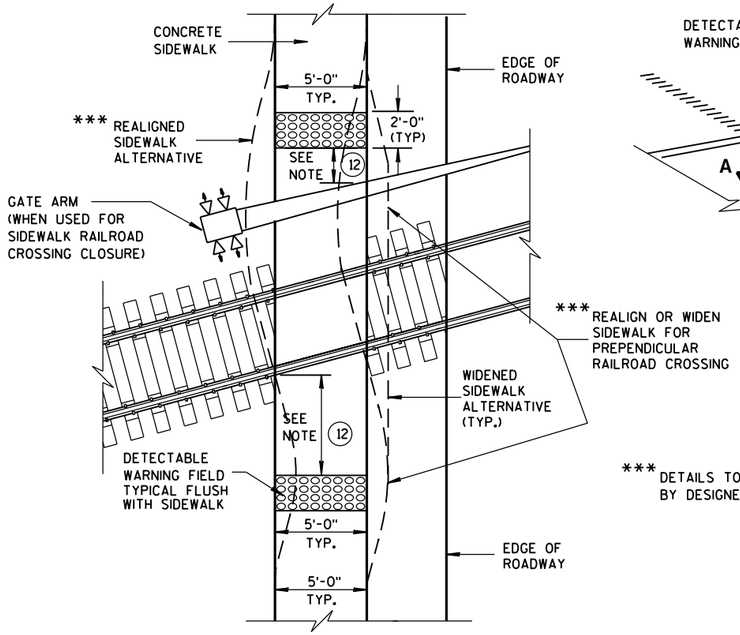

TYPE 8
DETECTABLE WARNINGS AT RAILROAD CROSSING

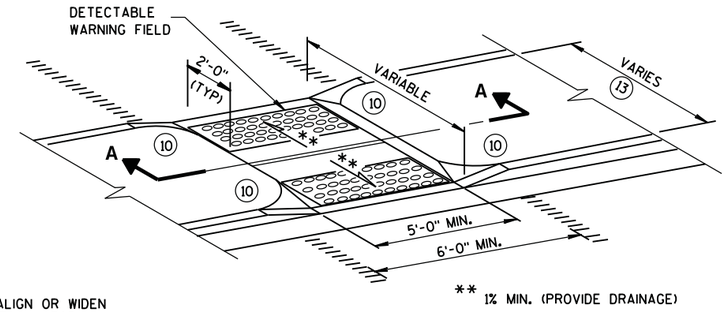

MEDIAN ISLAND
NON-ELEVATED CROSSING
TYPE 5

*** DETAILS TO BE DETERMINED BY DESIGNER

GENERAL NOTES

SIDEWALK CROSS SLOPE SHALL NOT EXCEED 2%.

DETECTABLE WARNING FIELDS THAT ARE INSTALLED AS A GROUP OR SIDE BY SIDE, SHALL BE FROM THE SAME MANUFACTURER.

(2) GRADE CHANGE BETWEEN GUTTER FLAG SLOPE AND THE CURB RAMP SLOPE SHALL NOT EXCEED 11%. MAXIMUM GUTTER FLAG SLOPE IS 4%. PROVIDE DRAINAGE AWAY FROM CURB RAMP AT GUTTER FLAG INTERFACE. NO VERTICAL LIPS OR DISCONTINUITIES GREATER THAN 1/4-INCH ARE ALLOWED.

(3) ABSOLUTE MAXIMUM 12H:1V (8.33%) CURB RAMP SLOPE IS ALLOWABLE WITH FLATTENED GUTTER FLAG SLOPE AND NOT TO EXCEED 11% GRADE CHANGE.

(4) ±0.5% CONSTRUCTION TOLERANCE IN SIDEWALK CROSS SLOPE. THE SIDEWALK CROSS SLOPE SHALL NOT EXCEED 2% WITHOUT PRIOR APPROVAL FROM THE ENGINEER.

(6) PROVIDE A LEVEL LANDING (MAXIMUM 2% SLOPE) IN ANY DIRECTION OF PEDESTRIAN TRAVEL. STANDARD LANDING SIZE IS 5 FEET X 5 FEET (MINIMUM 4 FEET X 4 FEET).

(10) INSTALL TRANSITION NOSE. (INCIDENTAL TO OTHER PAY ITEMS). DO NOT MARK TRANSITION NOSE.

(11) SLOPE SIDEWALK TOWARD LANDING AS SHOWN WHERE THERE IS NO TERRACE OR WHERE THE TERRACE WIDTH IS LESS THAN 6 FEET WIDE.

(12) THE EDGE OF THE DETECTABLE WARNING FIELD NEAREST TO A RAILROAD CROSSING SHALL BE 1.5 FEET ± 0.1' FROM THE FACE OF THE GATE ARM IF THE GATE ARM EXTENDS ACROSS THE SIDEWALK. WHERE THERE IS NO PEDESTRIAN GATE, THE EDGE OF THE DETECTABLE WARNING FIELD NEAREST TO THE RAILROAD CROSSING SHALL BE 15 FEET FROM THE NEAREST RAIL.

(13) DO NOT INSTALL DETECTABLE WARNING FIELDS IF MEDIAN WIDTH BETWEEN BACK OF CURBS IS LESS THAN 6 FEET.

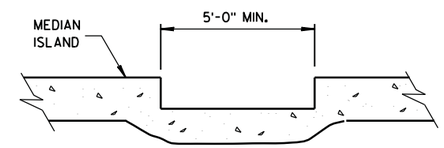

SECTION A-A

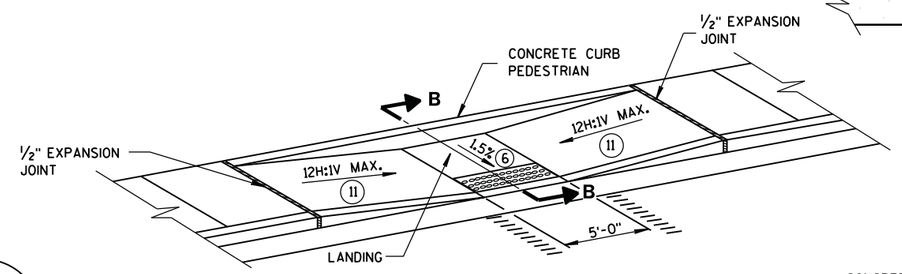

MID-BLOCK CROSSING
TYPE 7A

	MIN.	MAX.
A	1.6"	2.4"
B	0.65"	1.5"
C	*	*
D	0.9"	1.4"

* THE C DIMENSION IS 50% TO 65% OF THE D DIMENSION.

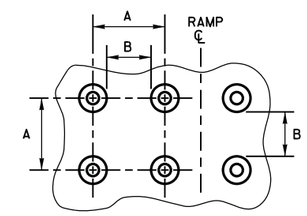

PLAN VIEW

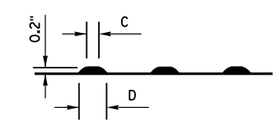

ELEVATION VIEW

TRUNCATED DOMES
DETECTABLE WARNING PATTERN DETAIL

REFER TO GENERAL NOTES (2) AND (3) FOR ALL ISLAND CURB RAMPS

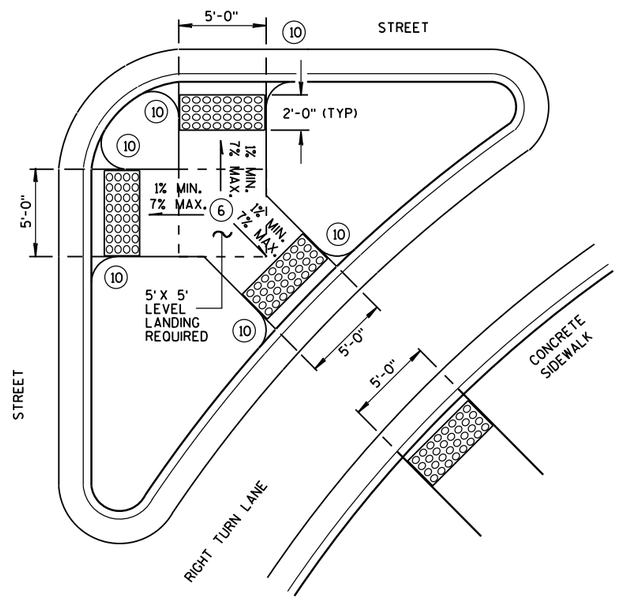

TYPE 6
DETECTABLE WARNING AT ISLANDS

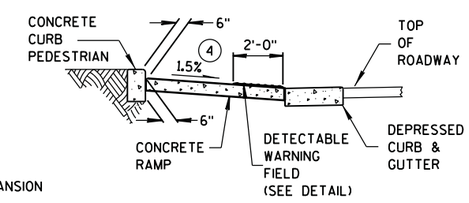

SECTION B-B

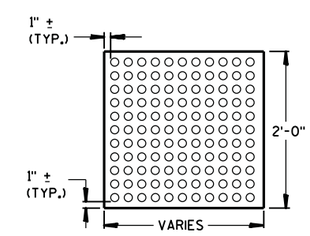

PLAN VIEW

DETECTABLE WARNING FIELD (TYPICAL)

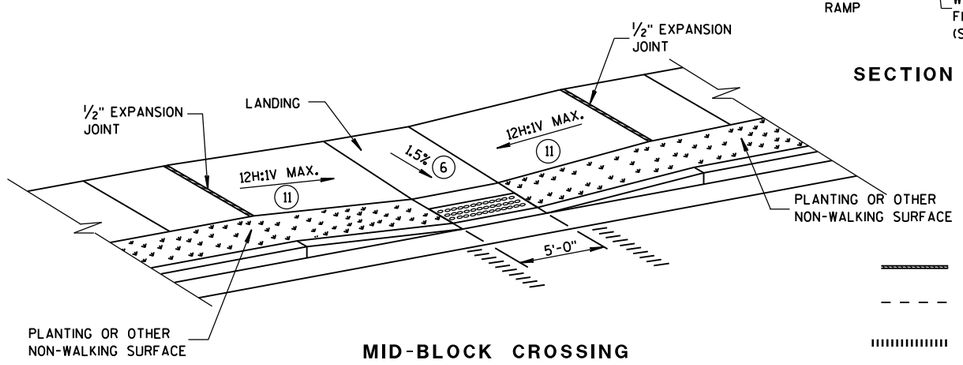

MID-BLOCK CROSSING
TYPE 7B

NOTE: THESE PARALLEL AND PARALLEL/PERPENDICULAR CURB RAMPS MAY BE USED AT INTERSECTIONS AND MID BLOCK LOCATIONS.

LEGEND

- 1/2" EXPANSION JOINT-SIDEWALK
- CONTRACTION JOINT FIELD LOCATED
- PAVEMENT MARKING CROSSWALK (WHITE)

CURB RAMPS
TYPES 5, 6, 7A, 7B & 8

STATE OF WISCONSIN
DEPARTMENT OF TRANSPORTATION

APPROVED
June, 2015
DATE
/S/ Jerry H. Zogg
ROADWAY STANDARDS DEVELOPMENT ENGINEER
FHWA

6

6

S.D.D. 8 D 5-16e

S.D.D. 8 D 5-16e

8D16: Concrete Gutter, Curb and Gutter and Pavement Ties

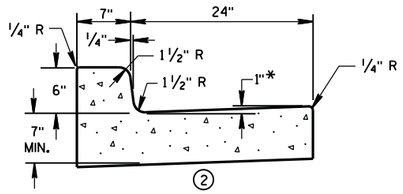

1 CONCRETE CURB & GUTTER 31"

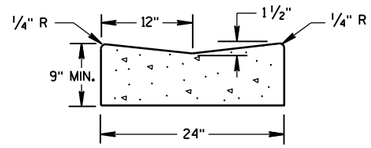

1 CONCRETE GUTTER 24"

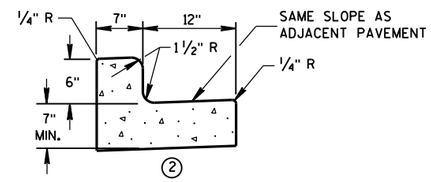

1 CONCRETE CURB & GUTTER 19"

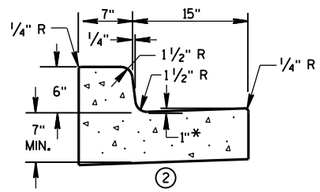

1 CONCRETE CURB & GUTTER 22"

* TO BE MEASURED TO A MAXIMUM OF 3" WHERE DRAINAGE PROBLEMS EXIST.

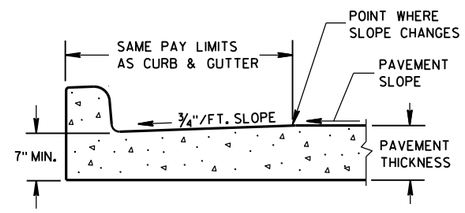

PARTIAL SECTION OF PAVEMENT WITH INTEGRAL CURB & GUTTER

GENERAL NOTES

DETAILS OF CONSTRUCTION, MATERIALS AND WORKMANSHIP NOT SHOWN ON THIS DRAWING SHALL CONFORM TO THE PERTINENT REQUIREMENTS OF THE CONTRACT.

PAVEMENT TIES AND TIE BARS SHALL BE EPOXY COATED IN CONFORMANCE WITH SUBSECTION 505.2.6.2 OF THE STANDARD SPECIFICATIONS.

INTEGRAL CURB & GUTTER SHALL CONFORM TO THE DETAILS SHOWN FOR CONCRETE CURB & GUTTER INCLUDING THE TRANSVERSE GUTTER SLOPE. A LONGITUDINAL CONSTRUCTION JOINT IS NOT REQUIRED WITH INTEGRAL CURB AND GUTTER.

WHERE THE TRANSVERSE JOINTS IN THE PAVEMENT ARE REQUIRED TO BE SEALED, THE JOINTS IN THE INTEGRAL CURB AND GUTTER SHALL BE SEALED TO THE FACE OF CURB WITH THE SAME TYPE OF SEALANT. THE COST OF FURNISHING AND INSTALLING THIS SEALANT SHALL BE INCIDENTAL TO THE ITEM CONCRETE CURB AND GUTTER.

UNLESS OTHERWISE SHOWN ON THE TYPICAL CROSS SECTIONS, THE BASE COURSE AND UNCLASSIFIED EXCAVATION LIMITS ARE 2'-0" BEHIND THE BACK OF CURB.

1 WHEN PLACED ADJACENT TO NEW CONCRETE, TIE BARS ARE REQUIRED FOR CURB AND GUTTER 31", 22", 19" AND CONCRETE GUTTER 24".

2 THE BOTTOM OF CURB AND GUTTER MAY BE CONSTRUCTED EITHER LEVEL OR PARALLEL TO THE SLOPE OF THE SUBGRADE OR BASE COURSE PROVIDED A 7" MIMIMUM GUTTER THICKNESS IS MAINTAINED.

3 WHEN HIGH SIDE CURB SECTION IS REQUIRED, THE LOCATION(S) WILL BE NOTED ON THE PLAN.

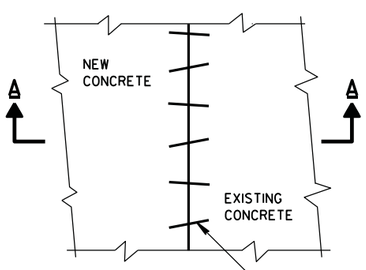

PLAN VIEW

EXISTING AND NEW CONCRETE MAY BE CURB & GUTTER, SURFACE DRAIN, PAVEMENT OR OTHER CONCRETE STRUCTURE.

NO. 6 X 12" DEF. BARS SPACED 3'-0" C-C, INSTALLED ON 6:1 SKEW HORIZONTALLY. DIRECTION OF SKEW ALTERNATING AFTER EVERY ONE OR TWO BARS.

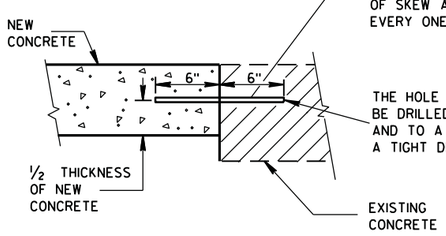

THE HOLE FOR THE BAR SHALL BE DRILLED TO A DEPTH OF 7" AND TO A DIAMETER TO PROVIDE A TIGHT DRIVEN FIT.

SECTION A-A

PAVEMENT TIES

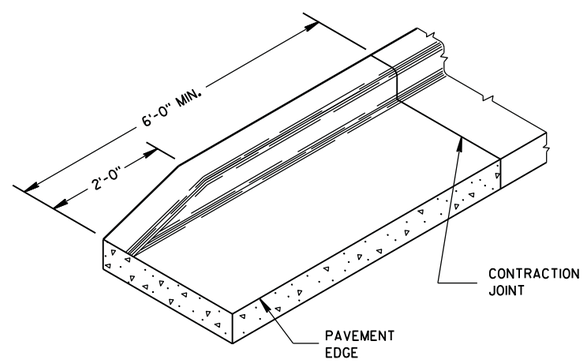

END SECTION CURB & GUTTER

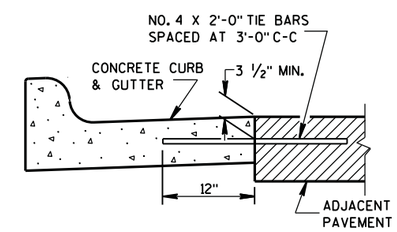

1 TYPICAL TIE BAR LOCATION

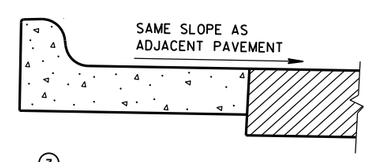

3 HIGH SIDE SECTION

(TYPICAL FOR ALL CURB & GUTTER)

CONCRETE GUTTER, CURB AND GUTTER AND PAVEMENT TIES

(For Optional Use in Milwaukee Co. Only)

STATE OF WISCONSIN
DEPARTMENT OF TRANSPORTATION

APPROVED

11/2/2010 — DATE

/S/ Jerry Zogg — ROADWAY STANDARDS DEVELOPMENT ENGINEER

FHWA

6

6

S.D.D. 8 D 16-10

S.D.D. 8 D 16-10

8E8: Typical Installations of Erosion Bales/Temporary Ditch Checks

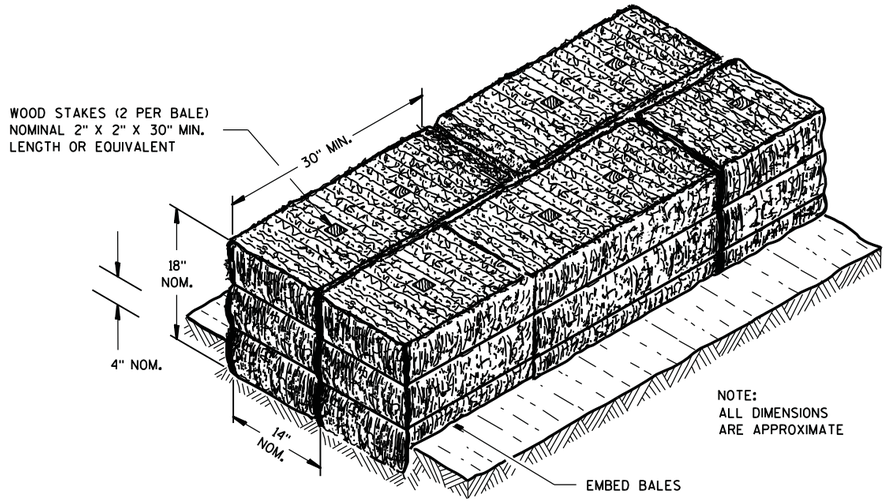

SECTION A-A

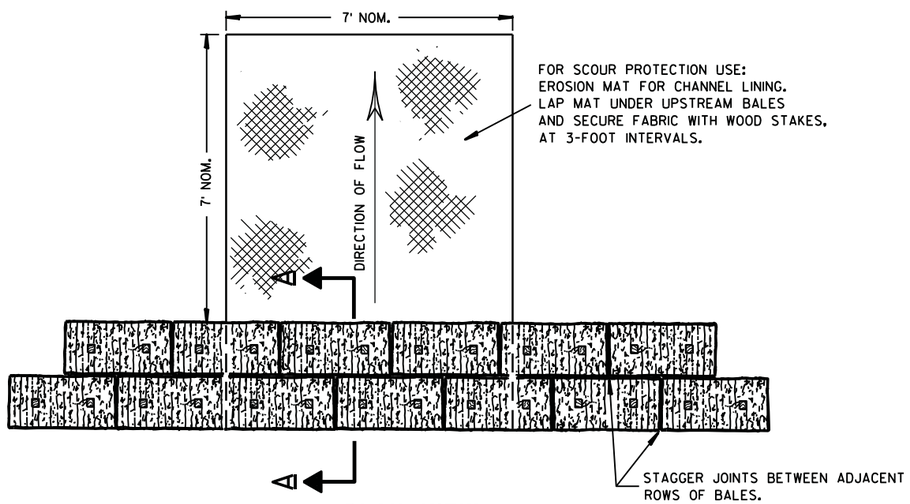

PLAN VIEW

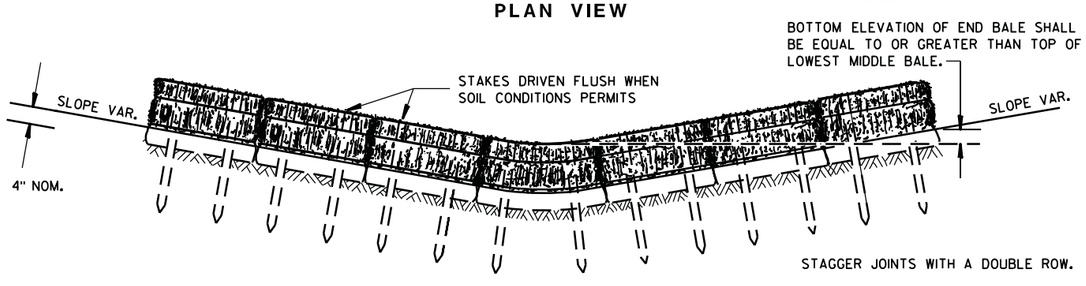

FRONT ELEVATION

TEMPORARY DITCH CHECK USING EROSION BALES ①

GENERAL NOTES

DETAILS OF CONSTRUCTION, MATERIALS AND WORKMANSHIP NOT SHOWN ON THIS DRAWING SHALL CONFORM TO THE PERTINENT REQUIREMENTS OF THE STANDARD SPECIFICATIONS AND THE APPLICABLE SPECIAL PROVISIONS.

① TEMPORARY DITCH CHECKS EITHER EROSION BALES OR MANUFACTURED SHALL BE PAID FOR UNDER THE BID ITEM OF TEMPORARY DITCH CHECK. THE DEPARTMENT WILL NOT PAY FOR TEMPORARY DITCH CHECKS CONSTRUCTED OF A SINGLE ROW OF EROSION BALES.

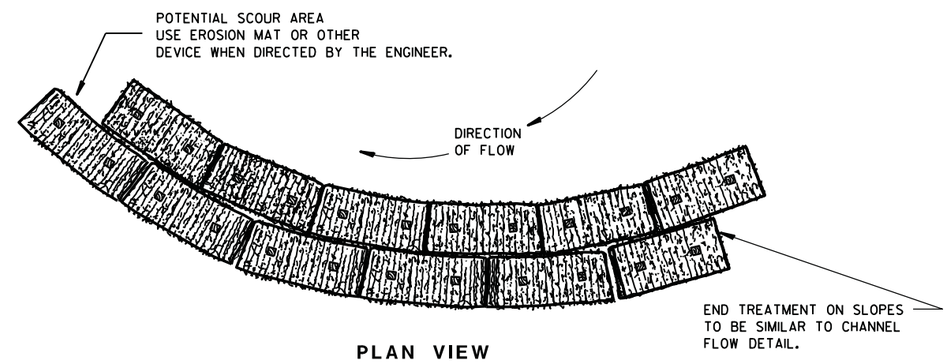

PLAN VIEW

WHEN ALTERING THE DIRECTION OF FLOW

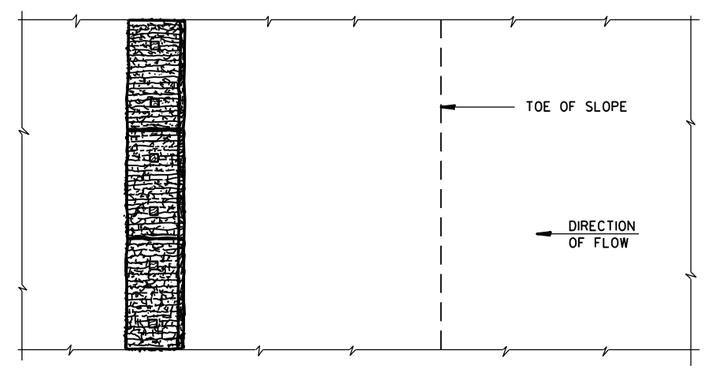

PLAN VIEW

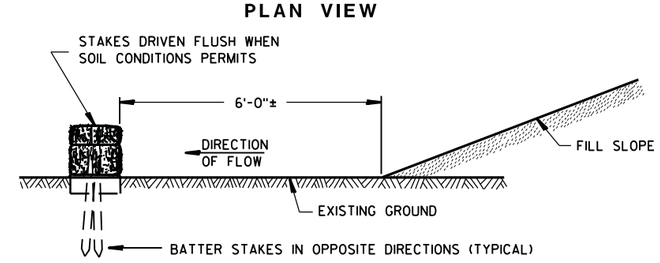

FRONT ELEVATION

WHEN EXISTING GROUND SLOPES AWAY FROM FILL SLOPE

EROSION BALES FOR SHEET FLOW

TYPICAL INSTALLATIONS OF EROSION BALES / TEMPORARY DITCH CHECKS

STATE OF WISCONSIN
DEPARTMENT OF TRANSPORTATION

APPROVED
6/04/02 — /S/ Beth Cannestra
DATE — CHIEF ROADWAY DEVELOPMENT ENGINEER
FHWA

6

S.D.D. 8 E 8-3

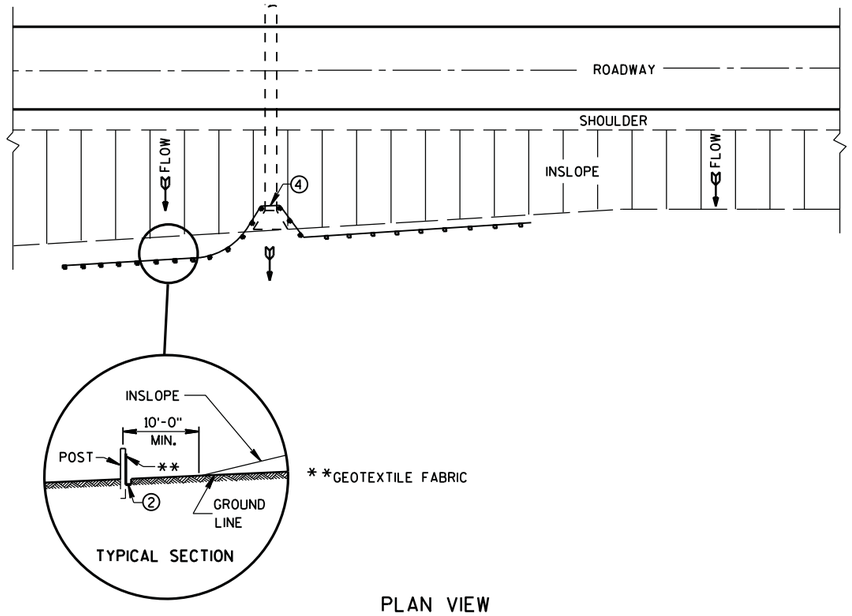

PLAN VIEW

TYPICAL APPLICATION OF SILT FENCE

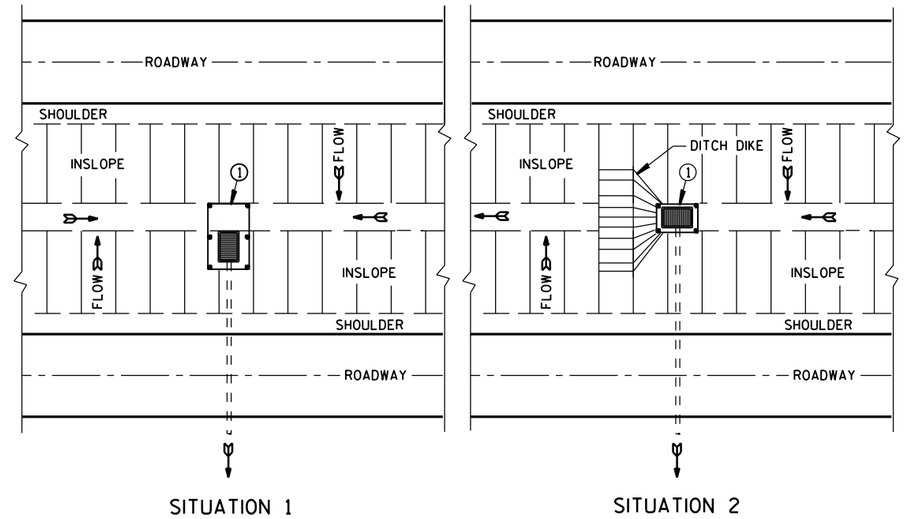

PLAN VIEW

SILT FENCE AT MEDIAN SURFACE DRAINS

GENERAL NOTES

DETAILS OF CONSTRUCTION NOT SHOWN ON THIS DRAWING SHALL CONFORM TO THE PERTINENT REQUIREMENTS OF THE STANDARD SPECIFICATIONS AND APPLICABLE SPECIAL PROVISIONS.

① HORIZONTAL BRACE REQUIRED WITH 2" X 4" WOODEN FRAME OR EQUIVALENT AT TOP OF POSTS.

② FOR MANUAL INSTALLATIONS THE TRENCH SHALL BE A MINIMUM OF 4" WIDE & 6" DEEP TO BURY AND ANCHOR THE GEOTEXTILE FABRIC. FOLD MATERIAL TO FIT TRENCH AND BACKFILL & COMPACT TRENCH WITH EXCAVATED SOIL.

③ WOOD POSTS SHALL BE A MINIMUM SIZE OF 1⅛" X 1⅛" OF OAK OR HICKORY.

④ SILT FENCE TO EXTEND ACROSS THE TOP OF THE PIPE.

⑤ CONSTRUCT SILT FENCE FROM A CONTINUOUS ROLL IF POSSIBLE BY CUTTING LENGTHS TO AVOID JOINTS. IF A JOINT IS NECESSARY USE ONE OF THE FOLLOWING TWO METHODS; A) OVERLAP THE END POSTS AND TWIST, OR ROTATE, AT LEAST 180 DEGREES, B) HOOK THE END OF EACH SILT FENCE LENGTH.

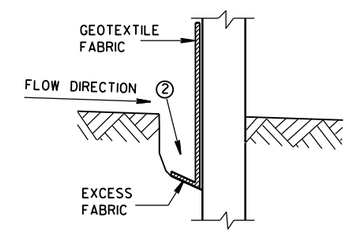

TRENCH DETAIL

NOTE: ADDITIONAL POST DEPTH OR TIE BACKS MAY BE REQUIRED IN UNSTABLE SOILS

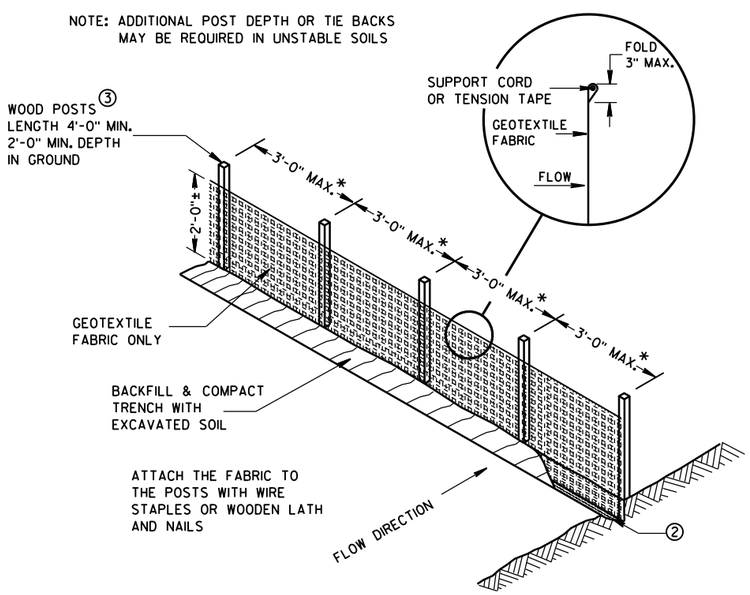

*NOTE: 8'-0" POST SPACING ALLOWED IF A WOVEN GEOTEXTILE FABRIC IS USED.

SILT FENCE

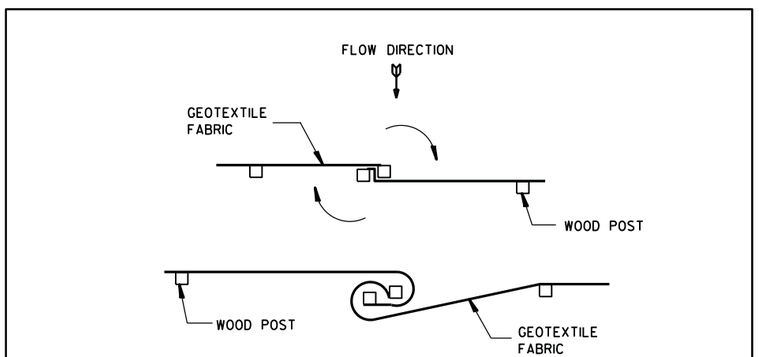

TWIST METHOD

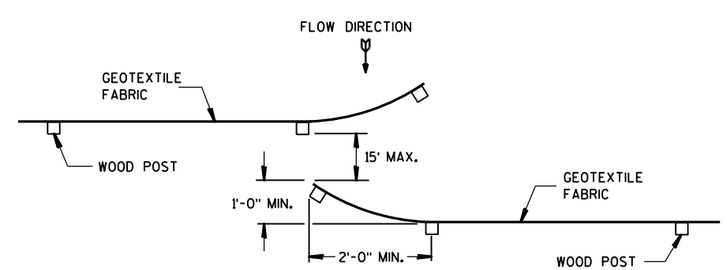

HOOK METHOD

JOINING TWO LENGTHS OF SILT FENCE ⑤

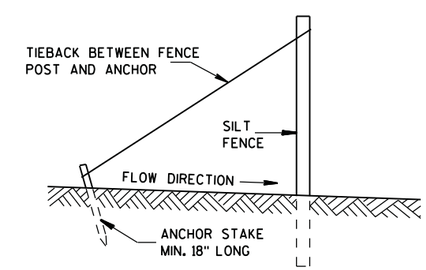

SILT FENCE TIE BACK

(WHEN REQUIRED BY THE ENGINEER)

SILT FENCE

STATE OF WISCONSIN
DEPARTMENT OF TRANSPORTATION

APPROVED
4-29-05 /S/ Beth Cannestra
DATE CHIEF ROADWAY DEVELOPMENT ENGINEER
FHWA

6

6

S.D.D. 8 E 9-6

S.D.D. 8 E 9-6

8E10: Inlet Protection Type A, B, C and D

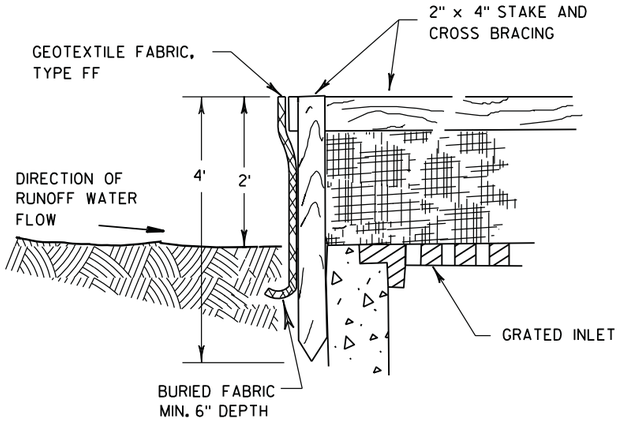

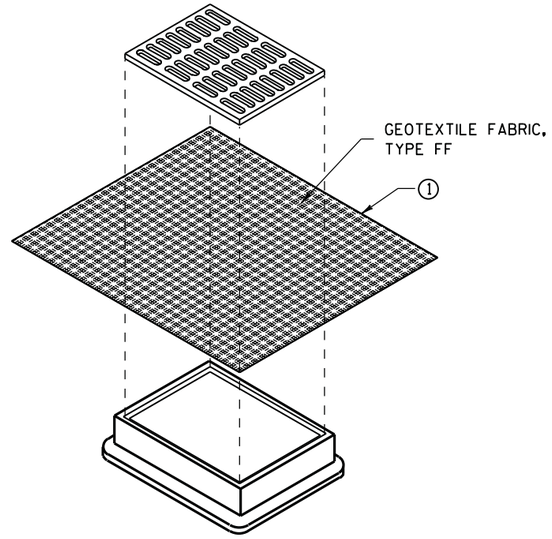

INLET PROTECTION, TYPE B (WITHOUT CURB BOX)

(CAN BE INSTALLED IN ANY INLET WITHOUT A CURB BOX)

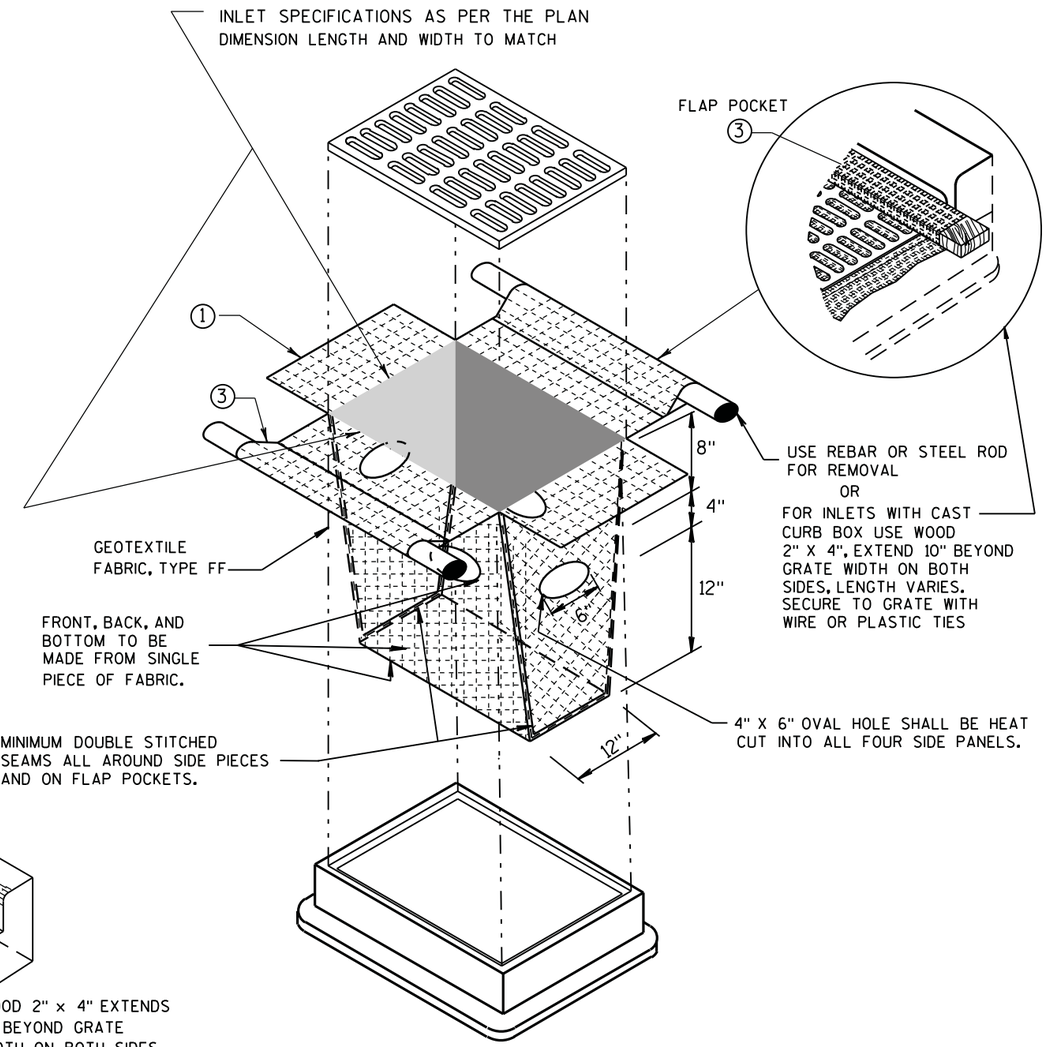

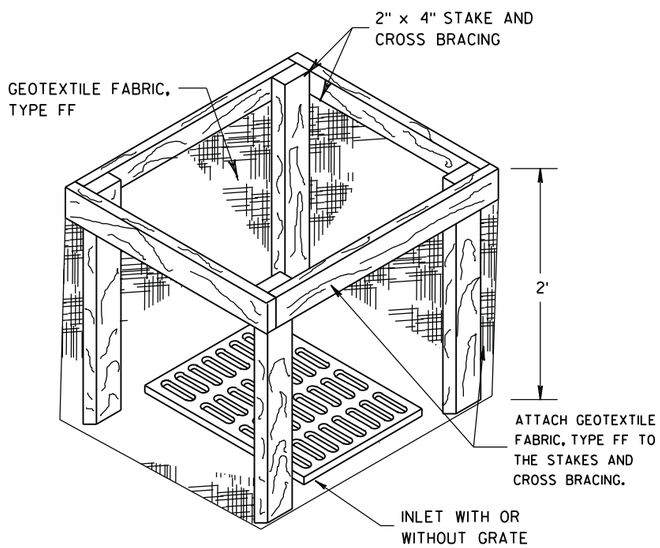

INLET PROTECTION, TYPE A

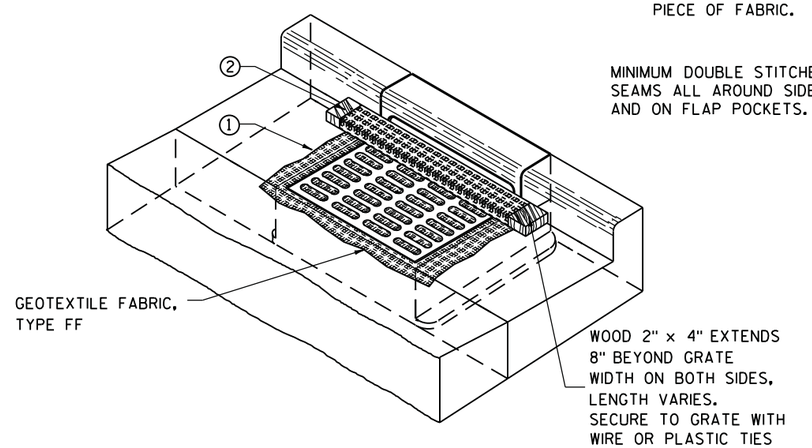

INLET PROTECTION, TYPE C (WITH CURB BOX)

INLET PROTECTION, TYPE D

(CAN BE INSTALLED IN ANY INLET TYPE WITH OR WITHOUT A CURB BOX AS PER NOTE 2)

GENERAL NOTES

INLET PROTECTION DEVICES SHALL BE MAINTAINED OR REPLACED AT THE DIRECTION OF THE ENGINEER.

MANUFACTURED ALTERNATIVES APPROVED AND LISTED ON THE DEPARTMENT'S EROSION CONTROL PRODUCT ACCEPTABILITY LIST MAY BE SUBSTITUTED.

WHEN REMOVING OR MAINTAINING INLET PROTECTION, CARE SHALL BE TAKEN SO THAT THE SEDIMENT TRAPPED ON THE GEOTEXTILE FABRIC DOES NOT FALL INTO THE INLET. ANY MATERIAL FALLING INTO THE INLET SHALL BE REMOVED IMMEDIATELY.

1 FINISHED SIZE, INCLUDING FLAP POCKETS WHERE REQUIRED, SHALL EXTEND A MINIMUM OF 10" AROUND THE PERIMETER TO FACILITATE MAINTENANCE OR REMOVAL.

2 FOR INLET PROTECTION, TYPE C (WITH CURB BOX), AN ADDITIONAL 18" OF FABRIC IS WRAPPED AROUND THE WOOD AND SECURED WITH STAPLES. THE WOOD SHALL NOT BLOCK THE ENTIRE HEIGHT OF THE CURB BOX OPENING.

3 FLAP POCKETS SHALL BE LARGE ENOUGH TO ACCEPT WOOD 2X4.

INSTALLATION NOTES

TYPE B & C

TRIM EXCESS FABRIC IN THE FLOW LINE TO WITHIN 3" OF THE GRATE.

THE CONTRACTOR SHALL DEMONSTRATE A METHOD OF MAINTENANCE, USING A SEWN FLAP, HAND HOLDS OR OTHER METHOD TO PREVENT ACCUMULATED SEDIMENT FROM ENTERING THE INLET.

TYPE D

DO NOT INSTALL INLET PROTECTION TYPE D IN INLETS SHALLOWER THAN 30", MEASURED FROM THE BOTTOM OF THE INLET TO THE TOP OF THE GRATE.

TRIM EXCESS FABRIC IN THE FLOW LINE TO WITHIN 3" OF THE GRATE.

THE INSTALLED BAG SHALL HAVE A MINIMUM SIDE CLEARANCE, BETWEEN THE INLET WALLS AND THE BAG, MEASURED AT THE BOTTOM OF THE OVERFLOW HOLES, OF 3". WHERE NECESSARY THE CONTRACTOR SHALL CINCH THE BAG, USING PLASTIC ZIP TIES, TO ACHIEVE THE 3" CLEARANCE. THE TIES SHALL BE PLACED AT A MAXIMUM OF 4" FROM THE BOTTOM OF THE BAG.

INLET PROTECTION TYPE A, B, C, AND D

STATE OF WISCONSIN
DEPARTMENT OF TRANSPORTATION

APPROVED
10-16-02 — DATE
/S/ Beth Cannestra — CHIEF ROADWAY DEVELOPMENT ENGINEER
FHWA

GENERAL NOTES

DETAILS OF CONSTRUCTION, MATERIALS AND WORKMANSHIP NOT SHOWN ON THIS DRAWING SHALL CONFORM TO THE PERTINENT REQUIREMENTS OF THE STANDARD SPECIFICATIONS AND THE APPLICABLE SPECIAL PROVISIONS.

TRACKING PAD SHALL BE INSPECTED DAILY. DEFICIENT AREAS SHALL BE REPAIRED OR REPLACED IMMEDIATELY.

TRACKING PAD TO BE REMOVED AFTER CONSTRUCTION IS COMPLETED.

TRACKING PAD SHALL BE THE FULL WIDTH OF THE EGRESS POINT.

SURFACE WATER MUST BE PREVENTED FROM PASSING THROUGH THE TRACKING PAD. FLOWS SHALL BE DIVERTED AWAY, AROUND OR CONVEYED UNDER THE TRACKING PAD.

CULVERT PIPE OR OTHER BMP USED TO DIVERT WATER AWAY, AROUND OR UNDER THE TRACKING PAD SHALL BE DESIGNED TO CONVEY THE 2 YEAR - 24 HOUR EVENT.

THE COST OF ADDITIONAL BMP TO DIVERT WATER ARE INCIDENTAL TO THE TRACKING PAD BID ITEM.

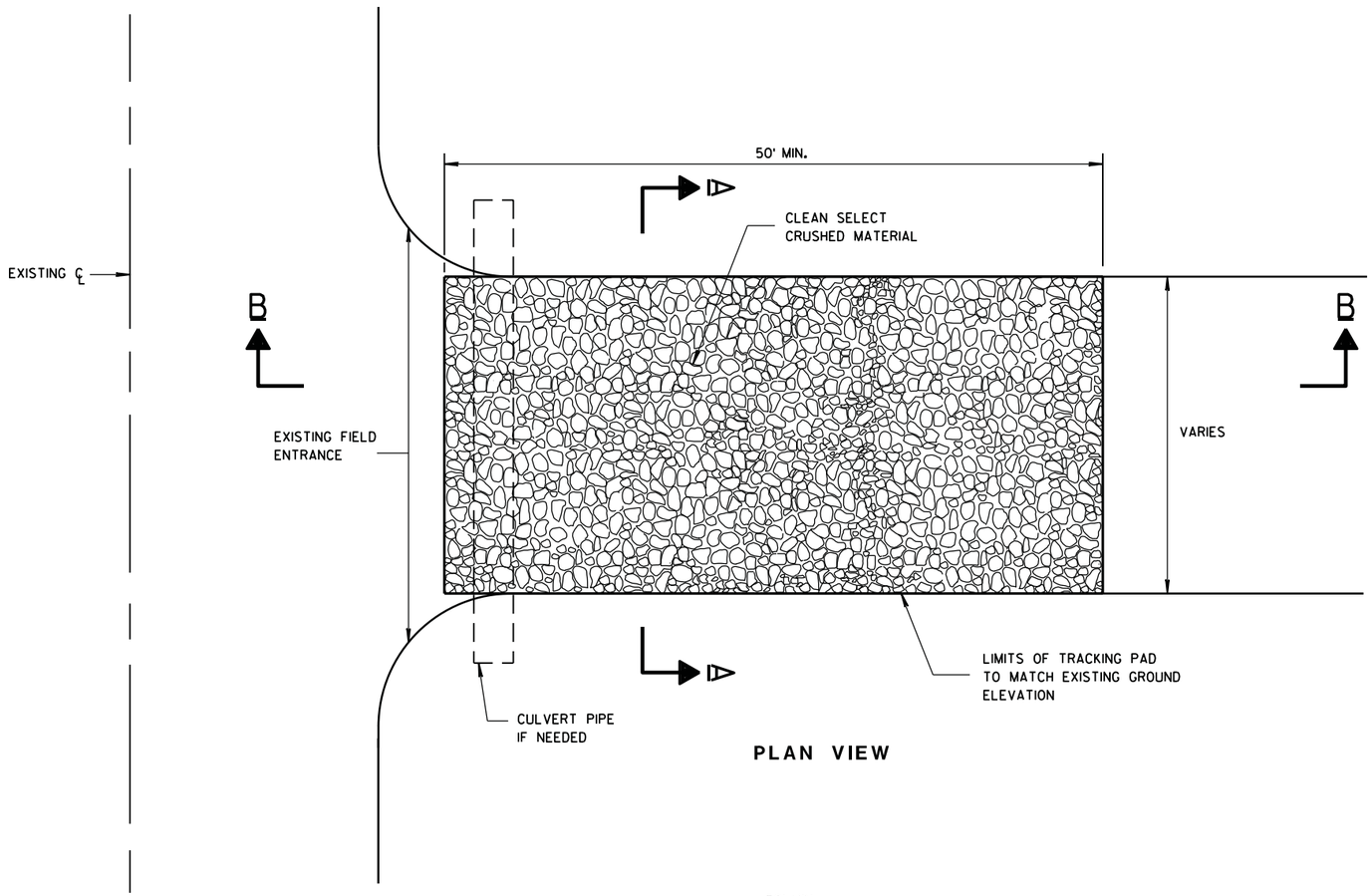

PLAN VIEW

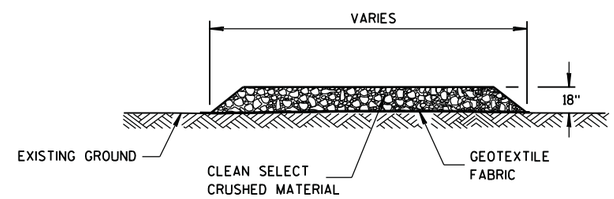

SECTION A-A

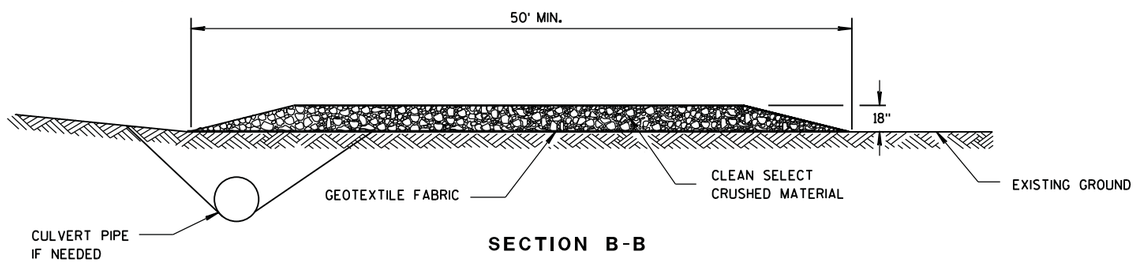

SECTION B-B

TRACKING PAD

TRACKING PAD	
STATE OF WISCONSIN DEPARTMENT OF TRANSPORTATION	
APPROVED 3-24-2011 DATE	/S/ Jerry H. Zogg ROADWAY STANDARDS DEVELOPMENT ENGINEER
FHWA	

6
S.D.D. 8 E 14-1

METAL APRON ENDWALLS

PIPE DIA. (IN.)	MIN. THICK. (Inches) STEEL	MIN. THICK. (Inches) ALUM.	DIMENSIONS (Inches) A (±1")	B (MAX.)	H (±1")	L (±1 1/2")	L1 ①	L2 ①	W (±2")	APPROX. SLOPE	BODY
12	.064	.060	6	6	6	21	12	17 1/2	24	2 1/2 to 1	1 Pc.
15	.064	.060	7	8	6	26	14	21 3/4	30	2 1/2 to 1	1 Pc.
18	.064	.060	8	10	6	31	15	28 1/4	36	2 1/2 to 1	1 Pc.
21	.064	.060	9	12	6	36	18	29 5/8	42	2 1/2 to 1	1 Pc.
24	.064	.075	10	13	6	41	18	37 1/4	48	2 1/2 to 1	1 Pc.
30	.079	.075	12	16	8	51	18	52 1/4	60	2 1/2 to 1	1 Pc.
36	.079	.105	14	19	9	60	24	59 3/4	72	2 1/2 to 1	2 Pc.
42	.109	.105	16	22	11	69	24	75 5/8	84	2 1/2 to 1	2 Pc.
48	.109	.105	18	27	12	78	24	81	90	2 1/4 to 1	3 Pc.
54	.109	.105	18	30	12	84	30	85 1/2	102	2 1/4 to 1	3 Pc.
60	.109×	.105×	18	33	12	87	—	—	114	2 to 1	3 Pc.
66	.109×	.105×	18	36	12	87	—	—	120	2 to 1	3 Pc.
72	.109×	.105×	18	39	12	87	—	—	126	2 to 1	3 Pc.
78	.109×	.105×	18	42	12	87	—	—	132	1 1/2 to 1	3 Pc.
84	.109×	.105×	18	45	12	87	—	—	138	1 1/2 to 1	3 Pc.
90	.109×	.105×	18	37	12	87	—	—	144	1 1/2 to 1	3 Pc.
96	.109×	.105×	18	35	12	87	—	—	150	1 1/2 to 1	3 Pc.

× EXCEPT CENTER PANEL
SEE GENERAL NOTES

REINFORCED CONCRETE APRON ENDWALLS

PIPE DIA. (IN.)	DIMENSIONS (Inches) T	A	B	C	D	E	G	APPROX. SLOPE
12	2	4	24	48 7/8	72 7/8	24	2	3 to 1
15	2 1/4	6	27	46	73	30	2 1/4	3 to 1
18	2 1/2	9	27	46	73	36	2 1/2	3 to 1
21	2 3/4	9	36	37 1/2	73 1/2	42	2 3/4	3 to 1
24	3	9 1/2	43 1/2	30	73 1/2	48	3	3 to 1
27	3 1/4	10 1/2	49 1/2	24	73 1/2	54	3 1/4	3 to 1
30	3 1/2	12	54	19 3/4	73 1/2	60	3 1/2	3 to 1
36	4	15	63	34 3/4	97 3/4	72	4	3 to 1
42	4 1/2	21	63	35	98	78	4 1/2	3 to 1
48	5	24	72	26	98	84	5	3 to 1
54	5 1/2	27	65	*33 1/4-**35	*98 1/4-**100	90	5 1/2	2 2/5 to 1
60	6	*30-**35	60	39	99	96	5	2 to 1
66	6 1/2	*24-**30	*72-**78	*21-**27	99	102	5 1/2	2 to 1
72	7	*24-**36	78	21	99	108	6	2 to 1
78	7 1/2	*24-**36	78	21	99	114	6 1/2	2 to 1
84	8	36	90 1/2	21	111 1/2	120	6 1/2	1 1/2 to 1
90	8 1/2	41	87 1/2	24	111 1/2	132	6 1/2	1 1/2 to 1

*MINIMUM
**MAXIMUM

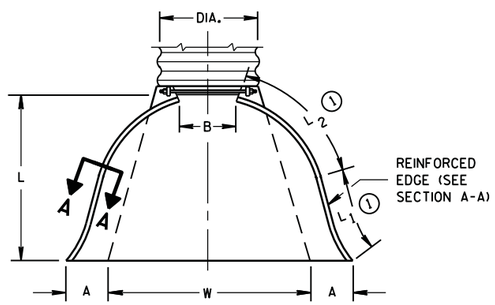

PLAN VIEW

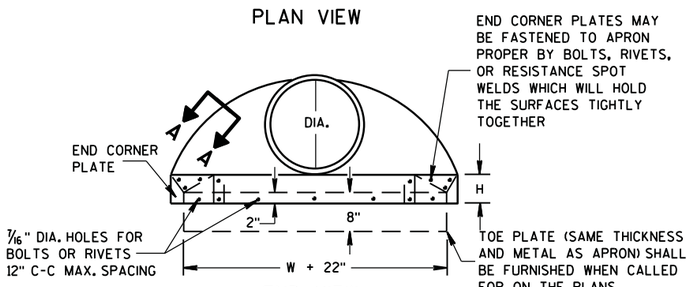

END VIEW

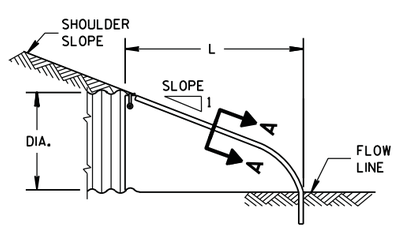

SIDE ELEVATION

METAL ENDWALLS

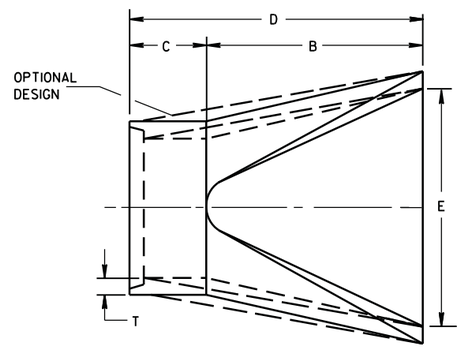

PLAN

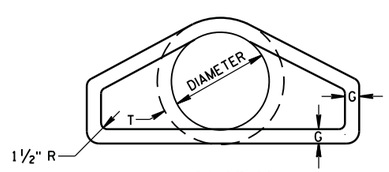

END VIEW

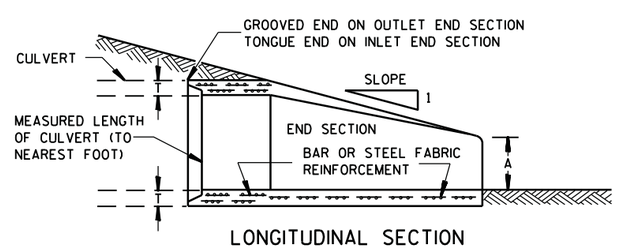

LONGITUDINAL SECTION

CONCRETE ENDWALLS

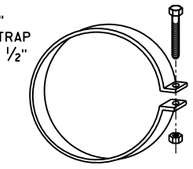

ALTERNATE FOR TYPE 1 CONNECTION

END SECTION CONNECTOR STRAP

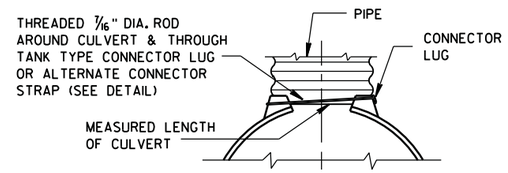

TYPE 1
FOR 12" THRU 24" CORR. PIPE

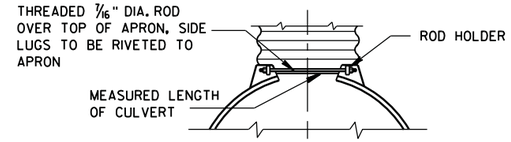

TYPE 2
FOR 30" THRU 96" CORR. PIPE

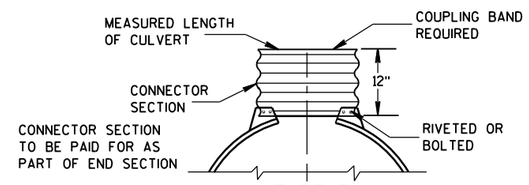

TYPE 3
FOR 42" THRU 96" CORR. PIPE

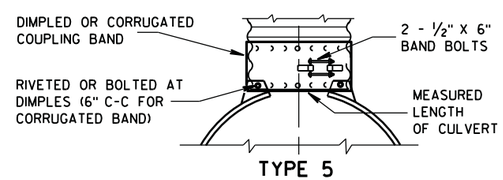

TYPE 5
ALTERNATE FOR:
ALL SIZES CORRUGATED CIRCULAR PIPE

NOTE: DIMPLED BAND FITS OVER OUTSIDE OF ENDWALL, AND CORRUGATED BAND FITS INSIDE ENDWALL. DIMPLED BAND MAY BE USED WITH HELICALLY CORRUGATED PIPE.

FOR CIRCUMFERENTIALLY CORRUGATED PIPE USE ENDWALL CONNECTION DETAILS 1, 2, 3 OR 5 AS APPLICABLE.

FOR HELICALLY CORRUGATED PIPE USE ENDWALL CONNECTION DETAILS 1, 2 OR 5.

FOR HELICALLY CORRUGATED PIPES WITH TWO CIRCUMFERENTIAL CORRUGATIONS AT EACH END USE ENDWALL CONNECTION DETAILS 1, 2 OR 3.

CONNECTION DETAILS

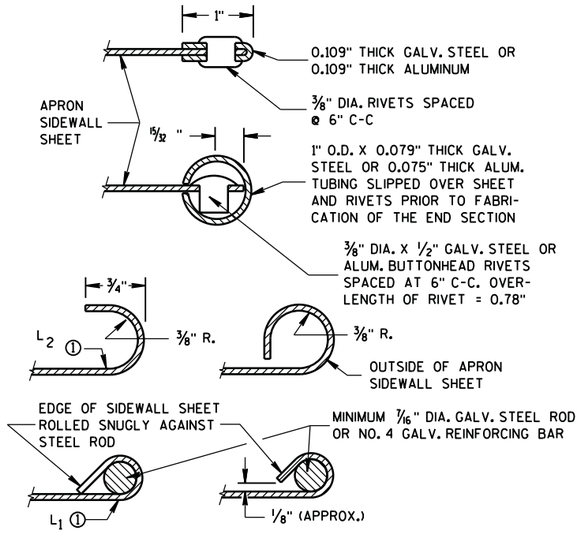

SECTION A-A

GENERAL NOTES

DETAILS OF CONSTRUCTION, MATERIALS AND WORKMANSHIP NOT SHOWN ON THIS DRAWING SHALL CONFORM TO THE PERTINENT REQUIREMENTS OF THE STANDARD SPECIFICATIONS AND THE APPLICABLE SPECIAL PROVISIONS.

CONCRETE CULVERT ENDWALLS MAY NOT BE USED WITH GALVANIZED STEEL OR ALUMINUM CULVERT PIPE OR VISE VERSA. GALVANIZED STEEL OR ALUMINUM ENDWALLS SHALL NORMALLY BE INSTALLED ON CULVERT PIPE OF THE SAME METAL.

ALL THREE PIECE STEEL APRON ENDWALLS FOR 60" DIAMETER PIPE AND LARGER SHALL HAVE 0.109" SIDES AND 0.138" CENTER PANELS. ALL THREE PIECE ALUMINUM APRON ENDWALLS FOR 60" DIAMETER PIPE AND LARGER SHALL HAVE 0.105" SIDES AND 0.134" CENTER PANELS. THE WIDTH OF CENTER PANELS SHALL BE GREATER THAN 20 PERCENT OF THE PIPE PERIMETER.

LAP SEAMS SHALL BE TIGHTLY JOINED BY GALVANIZED RIVETS OR BOLTS FOR STEEL UNITS AND ALUMINUM RIVETS AND BOLTS FOR ALUMINUM UNITS. FOR THE 60" THROUGH 96" DIAMETER APRON ENDWALL SIZES, THE REINFORCED EDGES AND CENTER PANEL SEAMS SHALL BE FURTHER REINFORCED WITH GALVANIZED STEEL OR ALUMINUM STIFFENER ANGLES. THE ANGLES SHALL BE ATTACHED BY GALVANIZED NUTS AND BOLTS FOR STEEL UNITS AND ALUMINUM NUTS AND BOLTS FOR ALUMINUM UNITS.

WHERE TWO OR MORE PIPES WITH APRON ENDWALLS ARE LAID ADJACENT TO EACH OTHER, THEY SHALL BE SEPARATED BY A DISTANCE SUFFICIENT TO PROVIDE A MINIMUM CLEARANCE OF 6 INCHES BETWEEN APRON ENDWALLS.

① FOR PIPE SIZES UP TO 60" DIAMETER, A 180° ROLLED EDGE MAY BE USED INSTEAD OF STEEL ROD REINFORCEMENT. SEE SECTION A-A.

APRON ENDWALLS FOR CULVERT PIPE

STATE OF WISCONSIN
DEPARTMENT OF TRANSPORTATION

APPROVED
8-30-94 — DATE
/S/ Rory L. Rhinesmith
CHIEF ROADWAY DEVELOPMENT ENGINEER
FHWA

8F2: Apron Endwalls for Pipe Arch and Elliptical Pipe

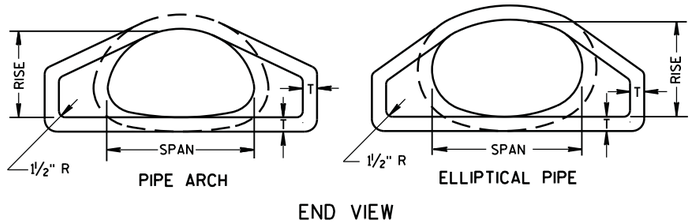

END VIEW

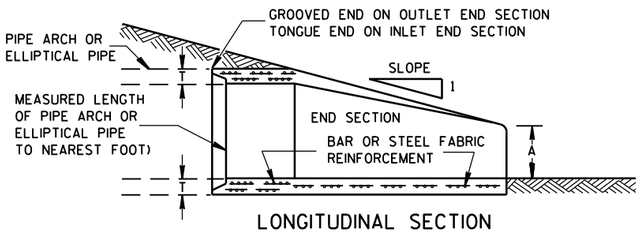

LONGITUDINAL SECTION

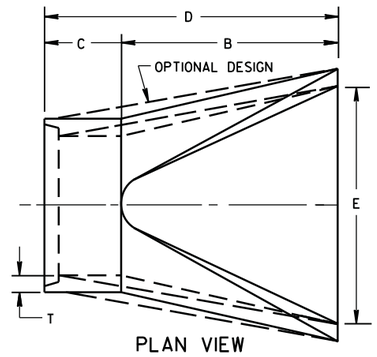

PLAN VIEW

CONCRETE ENDWALLS

2- 2/3" X 1/2" CORRUGATIONS														
EQUIV. DIA. (Inches)	(Inches)		MIN. THICK. (Inches)		DIMENSIONS (Inches)							APPROX. SLOPE	BODY
	SPAN	RISE	STEEL	ALUM.	A (±1")	B (MAX.)	H (±1")	L (±1 1/2")	L1 ①	L2 ①	W (±2")		
15	17	13	.064	.060	7	9	6	19	14	16	30	2½ to 1	1 Pc.
18	21	15	.064	.060	7	10	6	23	14	19⅜	36	2½ to 1	1 Pc.
21	24	18	.064	.060	8	12	6	28	18	21¾	42	2½ to 1	1 Pc.
24	28	20	.064	.060	9	14	6	32	18	27½	48	2½ to 1	1 Pc.
30	35	24	.079	.075	10	16	6	39	18	37⅝	60	2½ to 1	1 Pc.
36	42	29	.079	.075	12	18	8	46	24	45⅜	75	2½ to 1	1 Pc.
42	49	33	.109	.105	13	21	9	53	24	54¾	85	2½ to 1	2 Pc.
48	57	38	.109	.105	18	26	12	63	24	68	90	2½ to 1	3 Pc.
54	64	43	.109	.105	18	30	12	70	24	72¾	102	2¼ to 1	3 Pc.
60	71	47	.109*	.105*	18	33	12	77	30	82¼	114	2¼ to 1	3 Pc.
66	77	52	.109*	.105*	18	36	12	77	—	—	126	2 to 1	3 Pc.
72	83	57	.109*	.105*	18	39	12	77	—	—	138	2 to 1	3 Pc.

3" X 1" CORRUGATIONS														
EQUIV. DIA. (Inches)	(Inches)		MIN. THICK. (Inches)		DIMENSIONS (Inches)							APPROX. SLOPE	BODY
	SPAN	RISE	STEEL	ALUM.	A (±1")	B (MAX.)	H (±1")	L (±1 1/2")	L1 ①	L2 ①	W (±2")		
48	53	41	.109	.105	18	26	12	63	24	72¾	90	2½ to 1	2 Pc.
54	60	46	.109	.105	18	30	12	70	30	82¼	102	2 to 1	2 Pc.
60	66	51	.109*	.105*	18	33	12	77	—	—	114	1½ to 1	3 Pc.
66	73	55	.109*	.105*	18	36	12	77	—	—	126	1½ to 1	3 Pc.
72	81	59	.109*	.105*	18	39	12	77	—	—	138	2 to 1	3 Pc.
78	87	63	.109*	.105*	22	38	12	77	—	—	148	1½ to 1	3 Pc.
84	95	67	.109*	.105*	22	34	12	77	—	—	162	1½ to 1	3 Pc.
90	103	71	.109*	.105*	22	38	12	77	—	—	174	1½ to 1	3 Pc.
96	112	75	.109*	.105*	24	40	12	77	—	—	174	1½ to 1	3 Pc.

NOTE: ALL SPLICES TO BE LAP RIVETED OR BOLTED.

* EXCEPT CENTER PANEL SEE GENERAL NOTES

REINFORCED CONCRETE PIPE ARCH									
EQUIV. DIA. (Inches)	DIMENSIONS (Inches)								APPROX. SLOPE
	** SPAN	** RISE	T	A	B	C	D	E	
24	29	18	3	8½	39	33	72	48	3 to 1
30	36	22	3½	9½	50	46	96	60	3 to 1
36	44	27	4	11⅛	60	36	96	72	3 to 1
42	51	31	4½	15 13/16	60	36	96	78	3 to 1
48	58	36	5	21	60	36	96	84	3 to 1
54	65	40	5½	25½	60	36	96	90	3 to 1
60	73	45	6	31	60	36	96	96	3 to 1
72	88	54	7	31	60	39	99	120	2 to 1
84	102	62	8	28½	83	19	102	144	2 to 1

REINFORCED CONCRETE ELLIPTICAL PIPE									
EQUIV. DIA. (Inches)	DIMENSIONS (Inches)								APPROX. SLOPE
	** SPAN	** RISE	T	A	B	C	D	E	
24	30	19	3¼	8½	39	33	72	48	3 to 1
30	38	24	3¾	9½	54	18	72	60	3 to 1
36	45	29	4½	11⅛	60	24	84	72	2½ to 1
42	53	34	5	15¾	60	36	96	78	2½ to 1
48	60	38	5½	21	60	36	96	84	2½ to 1
54	68	43	6	25½	60	36	96	90	2½ to 1
60	76	48	6½	30	60	36	96	96	2½ to 1

**NOMINAL SIZE

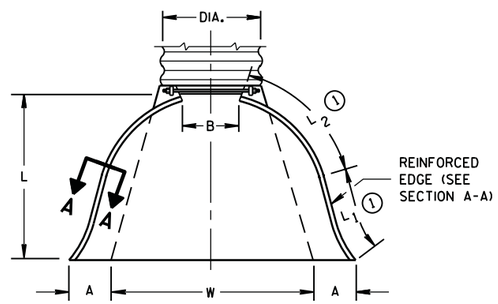

PLAN VIEW

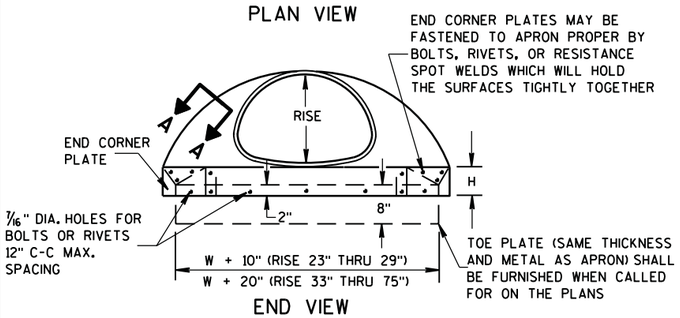

END VIEW

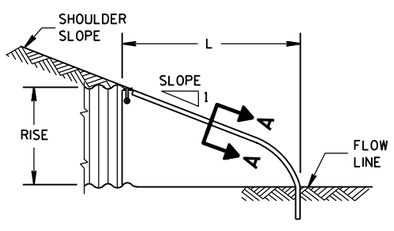

SIDE ELEVATION

METAL ENDWALLS

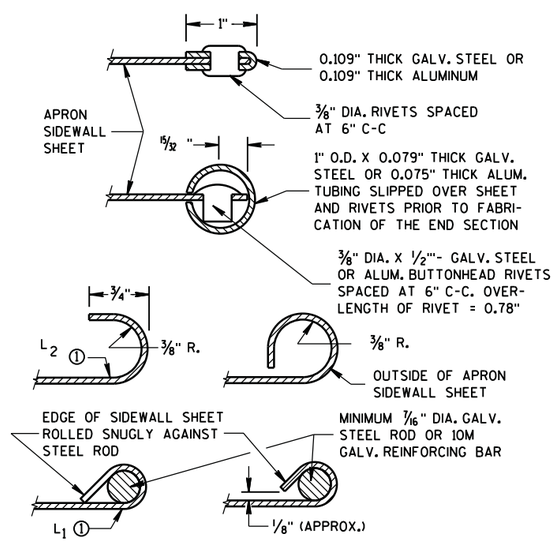

SECTION A-A

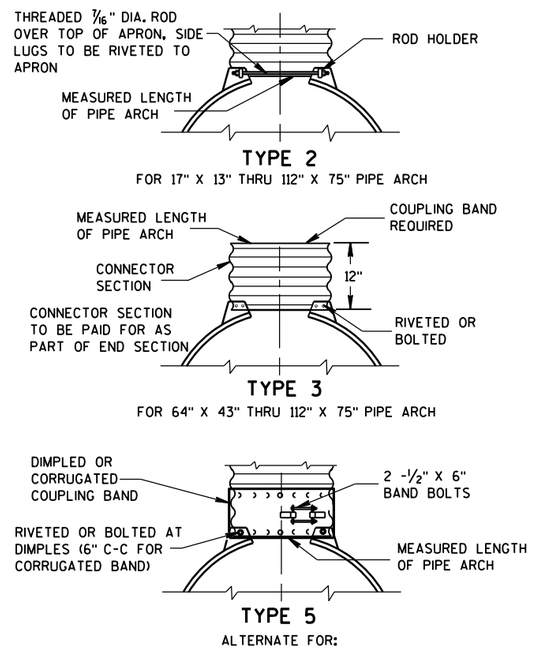

NOTE: DIMPLED BAND FITS OVER OUTSIDE OF ENDWALL, AND CORRUGATED BAND FITS INSIDE ENDWALL.

CONNECTION DETAILS

GENERAL NOTES

DETAILS OF CONSTRUCTION, MATERIALS AND WORKMANSHIP NOT SHOWN ON THIS DRAWING SHALL CONFORM TO THE PERTINENT REQUIREMENTS OF THE STANDARD SPECIFICATIONS AND THE APPLICABLE SPECIAL PROVISIONS.

CONCRETE APRON ENDWALLS MAY NOT BE USED WITH GALVANIZED STEEL OR ALUMINUM CULVERT PIPE OR VISE VERSA. GALVANIZED STEEL OR ALUMINUM APRON ENDWALLS SHALL NORMALLY BE INSTALLED ON CULVERT PIPE OF THE SAME METAL.

ALL THREE PIECE STEEL APRON ENDWALLS FOR 66" X 51" PIPE ARCH AND LARGER SHALL HAVE 0.109" SIDES AND 0.138" CENTER PANELS. ALL THREE PIECE ALUMINUM APRON ENDWALLS FOR 66" X 51" PIPE ARCH AND LARGER SHALL HAVE 0.105" SIDES AND 0.134" CENTER PANELS. THE WIDTH OF CENTER PANELS SHALL BE GREATER THAN 20 PERCENT OF THE PIPE ARCH PERIMETER.

LAP SEAMS SHALL BE TIGHTLY JOINED BY GALVANIZED RIVETS OR BOLTS FOR STEEL UNITS AND ALUMINUM RIVETS AND BOLTS FOR ALUMINUM UNITS. FOR THE 77" X 52" THROUGH 112" X 75" APRON ENDWALL SIZES, THE REINFORCED EDGES AND CENTER PANEL SEAMS SHALL BE FURTHER REINFORCED WITH GALVANIZED STEEL OR ALUMINUM STIFFENER ANGLES. THE ANGLES SHALL BE ATTACHED BY GALVANIZED NUTS AND BOLTS FOR STEEL UNITS AND ALUMINUM NUTS AND BOLTS FOR ALUMINUM UNITS.

WHERE TWO OR MORE PIPES WITH APRON ENDWALLS ARE LAID ADJACENT TO EACH OTHER, THEY SHALL BE SEPARATED BY A DISTANCE SUFFICIENT TO PROVIDE A MINIMUM CLEARANCE OF 6 INCHES BETWEEN APRON ENDWALLS.

① FOR PIPE ARCH SIZES UP TO 73" X 55" A 180° ROLLED EDGE MAY BE USED INSTEAD OF STEEL ROD REINFORCEMENT. SEE SECTION A-A.

APRON ENDWALLS FOR PIPE ARCH AND ELLIPTICAL PIPE

STATE OF WISCONSIN
DEPARTMENT OF TRANSPORTATION

APPROVED
11-30-94 — DATE
/S/ Rory L. Rhinesmith — CHIEF ROADWAY DEVELOPMENT ENGINEER
FHWA

6

S.D.D. 8 F 2-1

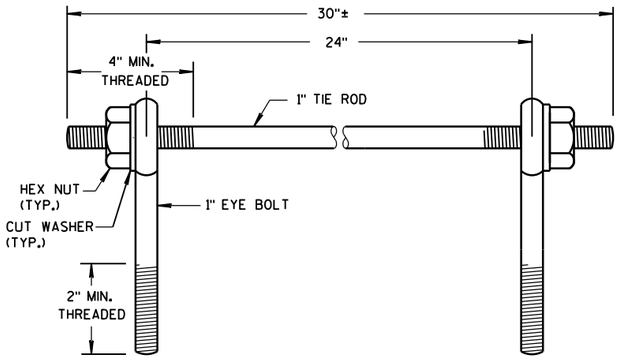

EYE BOLTS AND TIE ROD

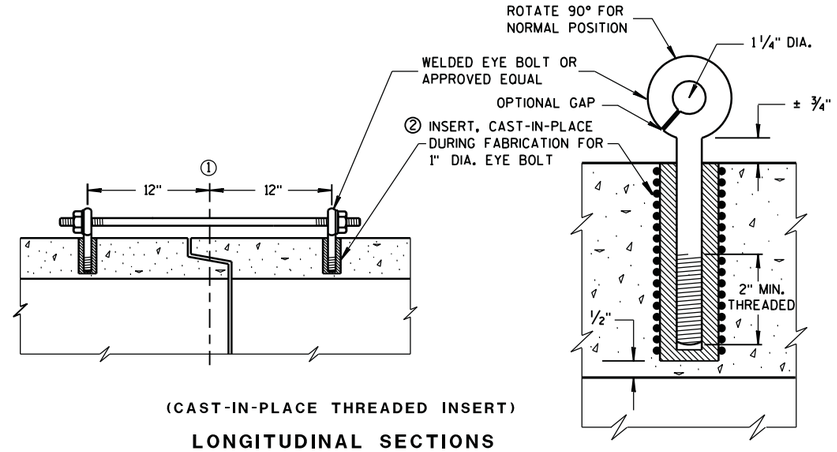

(CAST-IN-PLACE THREADED INSERT)

LONGITUDINAL SECTIONS

EYE BOLT AND TIE ROD ASSEMBLY (ALTERNATE NO. 1)

GENERAL NOTES

DETAILS OF CONSTRUCTION, MATERIALS, AND WORKMANSHIP NOT SHOWN ON THIS DRAWING SHALL CONFORM TO THE PERTINENT REQUIREMENTS OF THE STANDARD SPECIFICATIONS AND APPLICABLE SPECIAL PROVISIONS.

CONCRETE CULVERT AND STORM SEWER PIPE SHALL BE TIED TOGETHER IN THE MANNER ILLUSTRATED BY THIS DETAIL AT LOCATIONS DESIGNATED IN THE STANDARD SPECIFICATIONS AND THE PLAN. THE CONTRACTOR MAY USE EITHER ALTERNATE 1, 2 OR 3 FOR DRAINAGE STRUCTURES. ONLY ALTERNATE 1 AND 3 MAY BE USED FOR CATTLE PASSES, UNLESS OTHERWISE STATED IN THE CONTRACT. THE MATERIALS, FABRICATION AND WORK NECESSARY TO TIE THE PIPE BY THIS DETAIL WILL BE CONSIDERED INCIDENTAL TO THE PIPE AND APRON ENDWALLS IF REQUIRED.

DETAILED DRAWINGS FOR PROPOSED ALTERNATE DESIGNS FOR JOINT TIES SHALL BE SUBMITTED TO THE ENGINEER FOR APPROVAL.

JOINT TIES TO BE HOT-DIP GALVANIZED PER ASTM A 153.

① ℄ OF TONGUE AND GROOVE OR BELL AND SPIGOT JOINTS.

② THE INSIDE OF THE THREADED INSERTS SHALL BE CLEAN TO ALLOW THE INSERTION OF THREADED EYE BOLTS.

③ HOLES SHALL BE CAST-IN-PLACE OR DRILLED 12 INCHES FROM ℄ OF TONGUE AND GROOVE.

④ BOLT PROJECTION INSIDE OF PIPE SHALL NOT EXCEED 2 INCHES.

⑤ OPENING TO BE ROD DIAMETER PLUS 1 INCH.

⑥ LENGTH ADEQUATE TO EXTEND TO WITHIN 1/2 INCH OF THE INNER SURFACE OF THE PIPE.

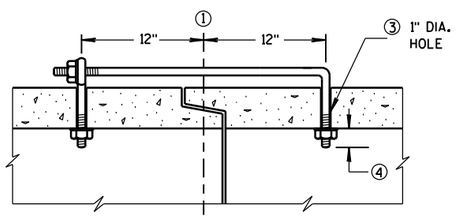

(TONGUE & GROOVE PIPE)

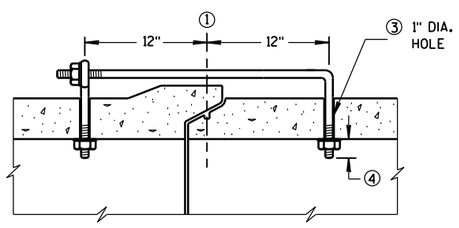

(MODIFIED BELL PIPE)

LONGITUDINAL SECTION

EYE BOLT DIMENSION TABLE

PIPE SIZE	L = LENGTH	
	TONGUE & GROOVE PIPE	MODIFIED BELL PIPE
18" TO 24"	4 1/2"	6 1/4"
30"	5"	7"
36"	5 1/2"	7"
42"	6"	
48"	6 1/2"	
60"	7 1/2"	
66"	8"	

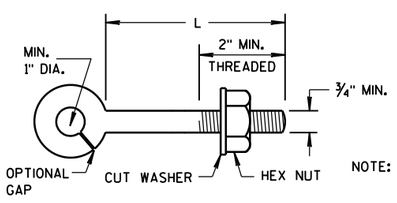

EYE BOLT

NOTE: TWO EYE BOLTS MAY BE USED WITH A 30" LONG THREADED ROD IN LIEU OF THE 90° BENT TIE ROD.

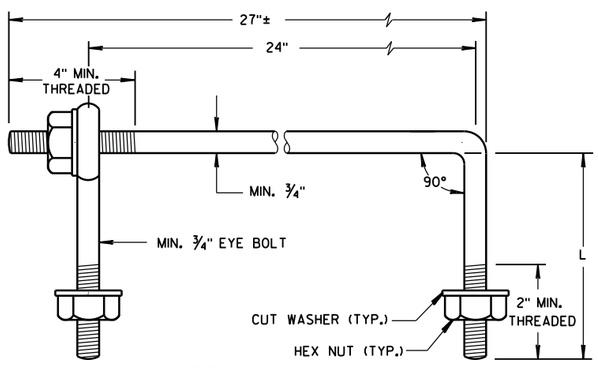

EYE BOLT AND TIE ROD

(JOINT TIES FOR 18" TO 66" DIA. CONCRETE PIPE)

EYE BOLT AND TIE ROD ASSEMBLY (ALTERNATE NO. 2)

ADJUSTABLE TIE ROD TABLE

PIPE DIAMETER	TIE ROD DIAMETER	D	L_1	N
12-60	5/8	5/8	5	1/2
66-84	3/4	3/4	5	1/2
90-108	1	1	7	1 7/16

DIMENSIONS SHOWN ARE IN INCHES

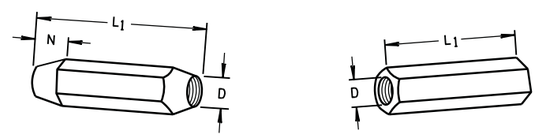

TAPERED PLAIN

RIGHT AND LEFT THREADS

SLEEVE NUTS

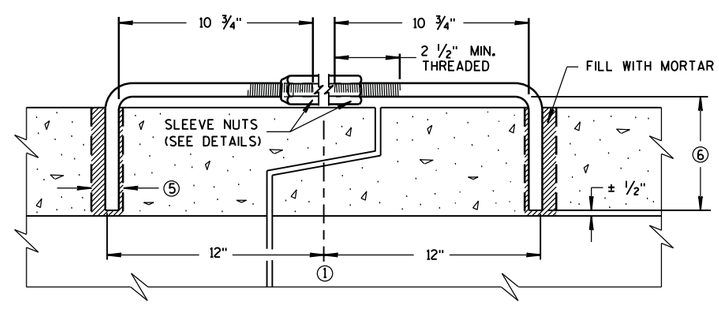

LONGITUDINAL SECTION

(JOINT TIES FOR 12" TO 108" DIA. CONCRETE PIPE)

ADJUSTABLE TIE ROD (ALTERNATE NO. 3)

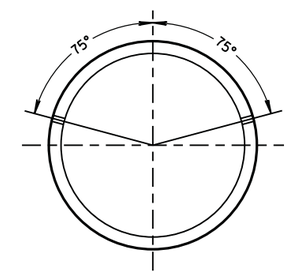

PLACEMENT OF (2) CAST-IN-PLACE INSERTS OR HOLES DURING FABRICATION FOR PIPE SECTIONS REQUIRING TIE RODS

TRANSVERSE SECTION

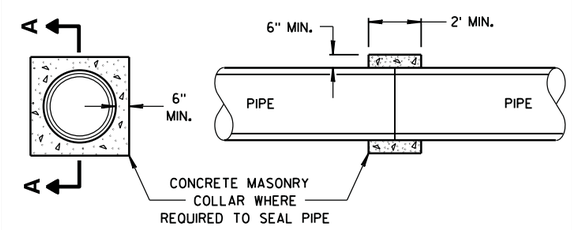

SECTION A-A

CONCRETE COLLAR DETAIL

JOINT TIES FOR CONCRETE PIPE AND CONCRETE COLLAR DETAIL

STATE OF WISCONSIN
DEPARTMENT OF TRANSPORTATION

APPROVED
6-5-2012 /S/ Jerry H. Zogg
DATE ROADWAY STANDARDS DEVELOPMENT ENGINEER
FHWA

6

6

S.D.D. 8 F 4-7

S.D.D. 8 F 4-7

GENERAL NOTES

DETAILS OF CONSTRUCTION, MATERIALS AND WORKMANSHIP NOT SHOWN ON THIS DRAWING SHALL CONFORM TO THE STANDARD SPECIFICATIONS AND THE APPLICABLE SPECIAL PROVISIONS.

THE SHAPED SUBGRADE WITH GRANULAR FOUNDATION IS AN EQUAL ALTERNATE TO THE GRANULAR FOUNDATION EXCEPT WHERE ROCK IS ENCOUNTERED.

① WHERE ROCK, HARD PAN OR FRAGMENTED MATERIAL IS ENCOUNTERED, THE TRENCH SHALL BE EXCAVATED BELOW THE BOTTOM OF THE PIPE AN AMOUNT EQUAL TO ½ INCH PER FOOT OF PROPOSED EMBANKMENT ABOVE THE TOP OF THE PIPE, BUT NOT LESS THAN 6 INCHES.

② TRENCH SHALL BE BACKFILLED AS REQUIRED BY STANDARD SPECIFICATIONS; SECTION 520 FOR PIPE CULVERTS AND SECTION 607 FOR STORM SEWERS.

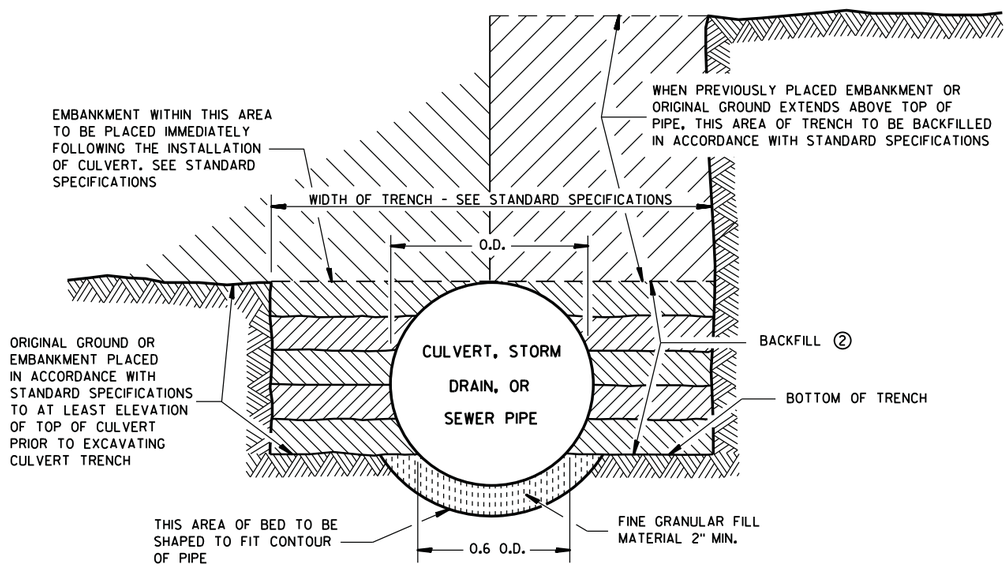

SHAPED SUBGRADE WITH GRANULAR FOUNDATION

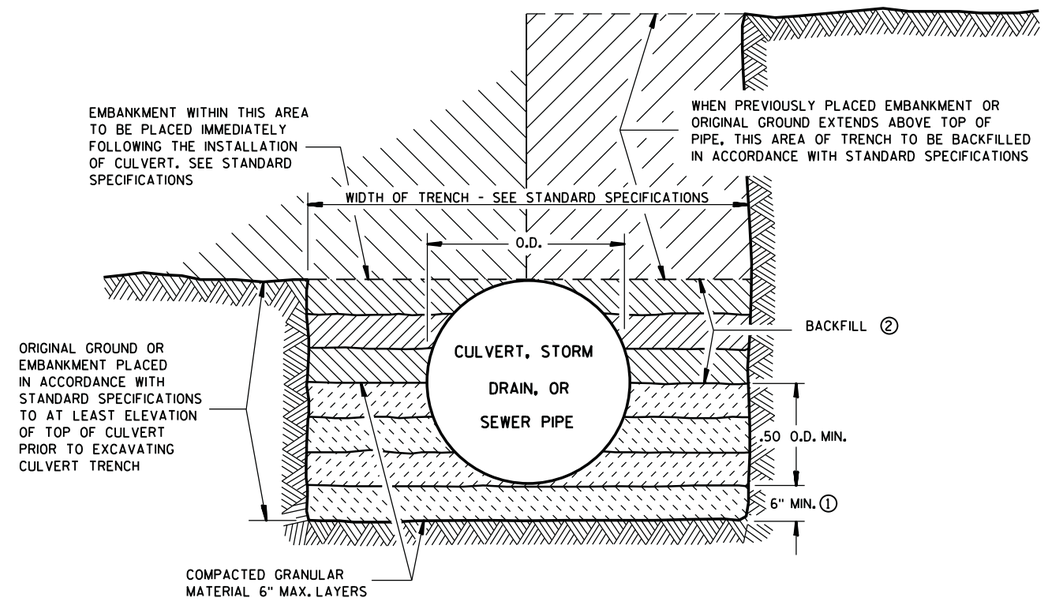

GRANULAR FOUNDATION

CLASS "B" BEDDING

CLASS "B" BEDDING FOR CULVERT PIPE OR STORM SEWER	
STATE OF WISCONSIN DEPARTMENT OF TRANSPORTATION	
APPROVED 4-7-83 DATE	/S/ D. L. Strand STATE DESIGN ENGINEER FOR HWYS
FHWA	

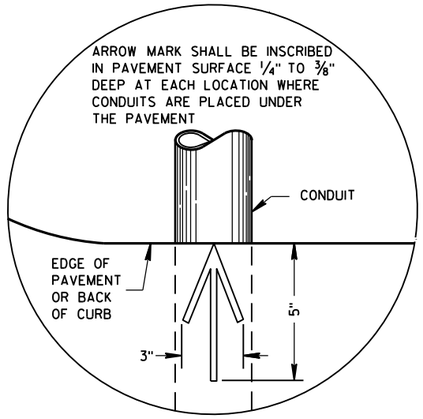

PLAN VIEW

ARROW MARK

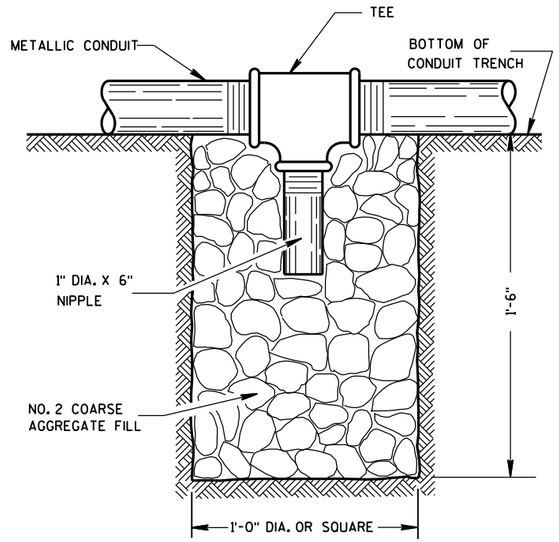

NOTE: INSTALL AT LOCATIONS WHERE METALLIC CONDUITS CANNOT BE PITCHED TO DRAIN INTO A PULL BOX.

DRAIN SUMP FOR METALLIC CONDUIT

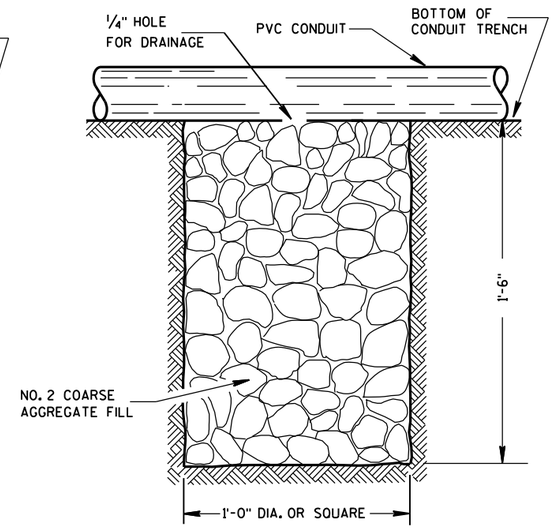

NOTE: INSTALL AT LOCATIONS WHERE PVC CONDUITS CANNOT BE PITCHED TO DRAIN INTO A PULL BOX.

DRAIN SUMP FOR PVC CONDUIT

GENERAL NOTES

DETAILS OF CONSTRUCTION, MATERIALS AND WORKMANSHIP NOT SHOWN ON THIS DRAWING SHALL CONFORM TO THE PERTINENT REQUIREMENTS OF THE CONTRACT.

METALLIC (STANDARD SPECIFICATION 652.2.2) OR NONMETALLIC (STANDARD SPECIFICATION 652.2.3) CONDUIT SHALL BE FURNISHED AND PLACED AS SHOWN.

DEPTH OF CONDUIT INSTALLED BELOW THE TRAVELED WAY SHALL BE 24 INCHES MINIMUM AND 36 INCHES MAXIMUM.

DEPTH OF CONDUIT INSTALLED THAT IS NOT BELOW THE TRAVELED WAY SHALL BE 18 INCHES MINIMUM AND 36 INCHES MAXIMUM.

ANY EXCEPTION TO THE MAXIMUM DEPTH SHALL BE ONLY WITH THE WRITTEN APPROVAL OF THE ENGINEER.

THE TRENCH SHALL NOT BE BACKFILLED PRIOR TO INSPECTION OF THE CONDUIT.

ALL METALLIC CONDUIT RACEWAY ENDS SHALL BE REAMED AND THREADED.

ALL METALLIC CONDUIT IN WHICH WIRE OR CABLE IS TO BE INSTALLED SHALL BE BUSHED WITH APPROVED THREADED BUSHINGS BEFORE INSTALLATION OF THE WIRE OR CABLE.

ALL METALLIC CONDUITS IN WHICH WIRE OR CABLE IS NOT TO BE INSTALLED SHALL BE CAPPED WITH THREADED PROTECTIVE CAPS, AS APPROVED BY THE ENGINEER.

ALL NONMETALLIC CONDUIT SHALL BE CAPPED OR PLUGGED IMMEDIATELY AFTER INSTALLATION AND SHALL REMAIN CAPPED OR PLUGGED UNTIL WIRE/CABLES ARE INSTALLED.

NONMETALLIC CONDUITS IN WHICH WIRE OR CABLE IS NOT BEING INSTALLED SHALL REMAIN CAPPED OR PLUGGED.

BENDING OF PVC ELECTRICAL CONDUIT SHALL BE ACCOMPLISHED BY USING A BLANKET OR EMERSION TYPE TANK DESIGNED FOR THE PURPOSE OF BENDING PVC ELECTRICAL CONDUIT.

ALL CUT ENDS SHALL BE TRIMMED INSIDE AND OUTSIDE TO REMOVE ALL ROUGH EDGES ON NONMETALLIC CONDUIT. (SEE NEC 347.5)

WHEN REQUIRED TO CONNECT NONMETALLIC CONDUIT TO METALLIC CONDUIT, ONLY U.L. LISTED ADAPTER FITTINGS SHALL BE USED.

PRIOR TO CONDUIT ACCEPTANCE, CONDUIT CAPS OR PLUGS SHALL BE REMOVED, AND THE CAPS, PLUGS AND CONDUIT ENDS SHALL BE THOROUGHLY CLEANED AND THEN THE CAPS OR PLUGS REINSTALLED TO ENSURE THAT THE CAPS OR PLUGS CAN BE EASILY REMOVED IN THE FUTURE.

ALL CONDUIT BEING FURNISHED AND INSTALLED SHALL HAVE THE U.L. LABEL FIRMLY ATTACHED.

CONDUIT RUNS SHALL BE THE SAME SIZE OF CONDUIT FROM ONE END TO THE OTHER (FROM PULL BOX TO PULL BOX-OR-JUNCTION BOX TO JUNCTION BOX-OR-BASE TO BASE, ETC.).

TRACER WIRE SHALL BE INSTALLED AS STATED IN THE STANDARD SPECIFICATION, ITEM 652.3.1.1.

ALL CONDUIT RUNS SHALL BE STRAIGHT (WITHOUT BENDS) FROM PULL BOX TO PULL BOX, PULL BOX TO BASE AND BASE TO BASE AS SHOWN ON THE PLANS.

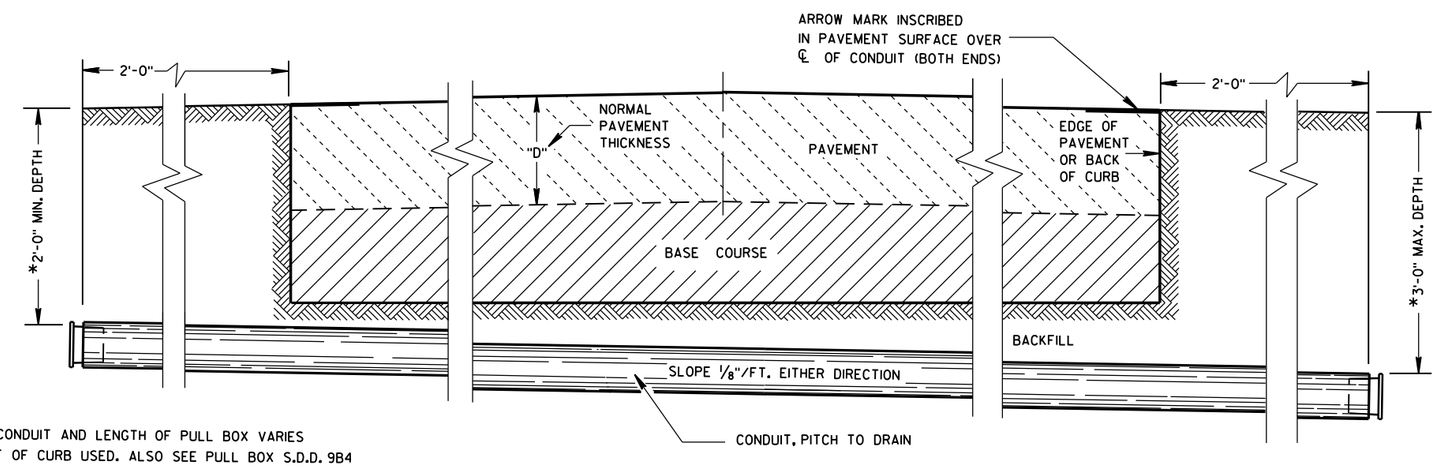

*DEPTH OF CONDUIT AND LENGTH OF PULL BOX VARIES WITH HEIGHT OF CURB USED. ALSO SEE PULL BOX S.D.D. 9B4

SIDE ELEVATION

DETAIL FOR CONDUIT UNDER PAVED HIGHWAYS

CONDUIT

STATE OF WISCONSIN
DEPARTMENT OF TRANSPORTATION

APPROVED
June, 2015 — /S/ Ahmet Demirbilek
DATE — STATE ELECTRICAL ENGINEER
FHWA

TABLE OF NOMINAL DIMENSIONS AND WEIGHTS

DIMENSION IN INCHES		CORRUGATED STEEL PIPE								
PIPE DIAMETER (INSIDE)	A	12	12	12	18	18	18	24	24	24
PIPE LENGTH **	B	24	30	36	24	30	36	36	42	48
WALL THICKNESS	C	0.064	0.064	0.064	0.064	0.064	0.064	0.064	0.064	0.064
COVER	D	10 1/4	10 1/4	10 1/4	16 1/4	16 1/4	16 1/4	22 1/4	22 1/4	22 1/4
FRAME	E	14 1/2	14 1/2	14 1/2	20 1/2	20 1/2	20 1/2	26 1/2	26 1/2	26 1/2
FRAME	F	8 1/2	8 1/2	8 1/2	14 1/2	14 1/2	14 1/2	20 1/2	20 1/2	20 1/2
FRAME	G	11 1/2	11 1/2	11 1/2	17 1/2	17 1/2	17 1/2	23 1/2	23 1/2	23 1/2
WEIGHT IN POUNDS *										
FRAME AND COVER		60	60	60	110	110	110	155	155	155

* THE ACTUAL WEIGHT OF THE MANHOLE FRAME AND COVER MAY VARY WITHIN 5 PERCENT PLUS OR MINUS OF THE WEIGHTS SHOWN.

** NORMALLY USED LENGTHS. THE PROJECT ENGINEER SHALL DETERMINE IF PIPE LENGTHS, OTHER THAN THOSE SPECIFIED, SHALL BE USED, TO A MAXIMUM OF 48" (CONTINUOUS LENGTH, NON-SPLICED). THE ADDITIONAL LENGTH SHALL BE INCIDENTAL TO THE PULL BOX BID PRICE.

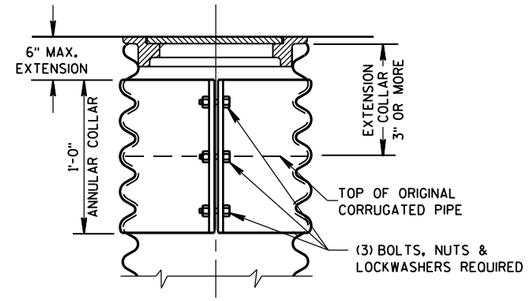

CORRUGATED PIPE EXTENDER

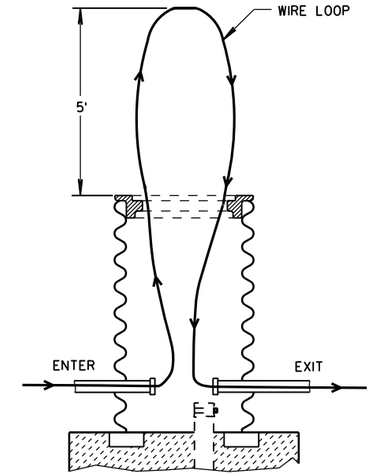

MEASUREMENT DETAIL FOR WIRE/CABLE IN THE PULL BOX

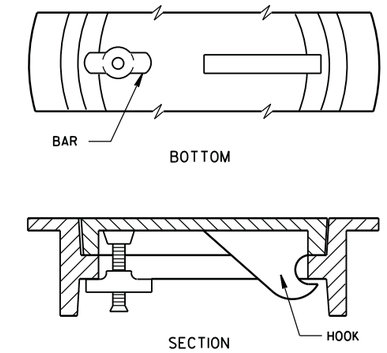

ALTERNATE COVER (LOCKING)

TIGHTENING BAR TYPE

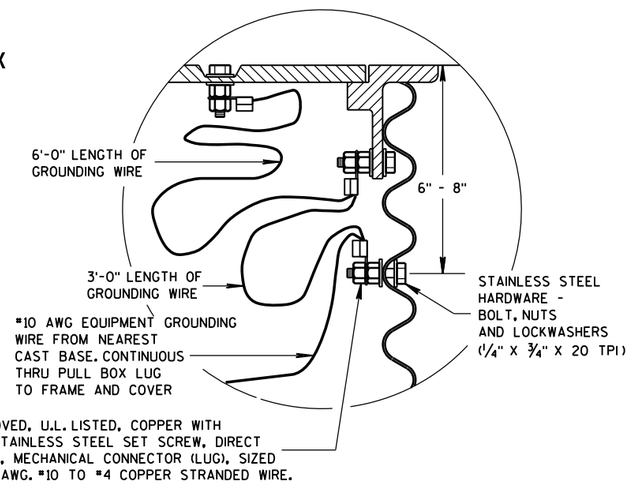

EQUIPMENT GROUNDING LUG AND LOCATION IN STEEL PULL BOXES

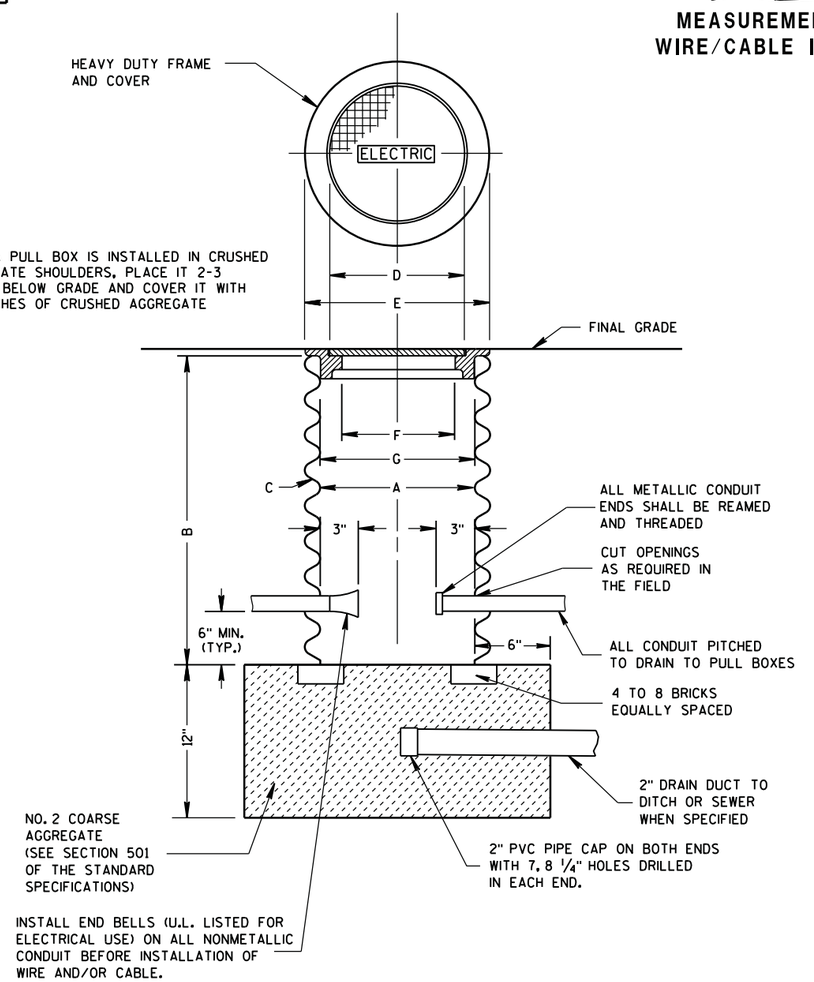

PULL BOX

GENERAL NOTES

DETAILS OF CONSTRUCTION, MATERIALS AND WORKMANSHIP NOT SHOWN ON THIS DRAWING SHALL CONFORM TO THE PERTINENT REQUIREMENTS OF THE CONTRACT.

ALL FRAMES AND COVERS SHALL BE HEAVY DUTY TYPE, SUITABLE FOR VEHICULAR TRAFFIC LOADS.

PULL BOXES LOCATED IN THE ROADWAYS SHALL HAVE LOCKING COVERS.

ENTRANCE HOLES INTO PULL BOXES SHALL BE CUT WITH A CIRCULAR HOLE SAW OR HYDRAULIC CONDUIT PUNCH. HOLE SIZE SHALL BE THE OUTSIDE DIAMETER OF THE CONDUIT THAT IS TO FIT IN THE OPENING PLUS NO MORE THAN 1/4".

THE CONTRACTOR SHALL NOT INSTALL WIRE IN ANY PULL BOX UNTIL ITS INSTALLATION HAS BEEN INSPECTED AND ACCEPTED BY THE ENGINEER.

GROUNDING LUGS (MECHANICAL CONNECTORS) SHALL BE U.L. LISTED AND APPROVED FOR USE WITH COPPER WIRE.

ALL METALLIC CONDUIT IN WHICH WIRE AND/OR CABLE IS TO BE INSTALLED, SHALL BE BUSHED BEFORE INSTALLATION OF THE WIRE AND/OR CABLE.

WHEN PULL BOXES ARE INSTALLED FOR FUTURE USE, DO NOT INSTALL THE EQUIPMENT GROUNDING LUG. THE EQUIPMENT GROUNDING LUG, THE EQUIPMENT GROUNDING ELECTRODE AND THE EQUIPMENT GROUNDING CONDUCTOR SHALL BE REQUIRED AND INSTALLED UNDER A FUTURE WIRING CONTRACT.

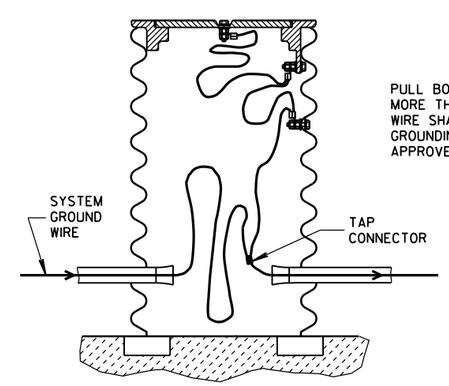

EQUIPMENT GROUNDING LUG AND LOCATION IN STEEL PULL BOXES

PULL BOX

STATE OF WISCONSIN
DEPARTMENT OF TRANSPORTATION

APPROVED
Sept. 2014 — /S/ Ahmet Demirbilek
DATE — STATE ELECTRICAL ENGINEER
FHWA

6

6

S.D.D. 9 B 4-11

S.D.D. 9 B 4-11

9C2: Concrete Bases Types 1, 2, 5 and 6

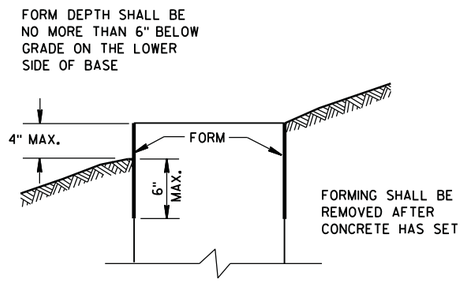

FORMING DETAIL

QUANTITY REQUIREMENTS	CONCRETE BASE TYPE		
	1	2	5 & 6
APPROX. CUBIC YARDS OF CONCRETE	0.40	0.57	0.40
LBS. OF HOOP BAR STEEL	NONE	23	16
LBS. OF VERTICAL BAR STEEL	NONE	60	18

GENERAL NOTES

DETAILS OF CONSTRUCTION, MATERIALS AND WORKMANSHIP NOT SHOWN ON THIS DRAWING SHALL CONFORM TO THE PERTINENT REQUIREMENTS OF THE CONTRACT.

BASES SHALL BE EXCAVATED BY USE OF A CIRCULAR AUGER.

TOP SURFACES OF CONCRETE BASES SHALL BE TROWEL FINISHED SMOOTH AND LEVEL.

CONDUIT SIZES AND LOCATIONS SHALL BE AS SHOWN ON THE PLANS.

THE FINAL OR TERMINATING CONCRETE BASE IN A CONDUIT RUN SHALL HAVE A 6" EXIT STUB INSTALLED FOR FUTURE CABLING USE. THE EXIT STUB SHALL BE SIZED AS USED THROUGHOUT THE CONDUIT RUN AS SHOWN AT THE ENTRANCE OF THE BASE.

MINIMUM BENDING RADIUS OF CONDUIT IS EQUAL TO 6 X THE DIAMETER.

CONDUIT HEIGHT ABOVE CONCRETE BASES SHALL BE 1 INCH. ALL METALLIC CONDUIT ENDS SHALL BE REAMED AND THREADED.

ALL CONDUIT ENDS AT THE TOP OF CONCRETE BASES SHALL BE CAPPED IF METALLIC OR PLUGGED IF NONMETALLIC IMMEDIATELY AFTER PLACEMENT AND BEFORE CONCRETE IS POURED. CONDUITS IN WHICH WIRE OR CABLE IS NOT INSTALLED SHALL REMAIN CAPPED OR PLUGGED.

GENERAL NOTES (CONTINUED)

BELL ENDS SHALL BE INSTALLED ON ALL PVC CONDUIT EXPOSED AT THE TOP OF CONCRETE BASES BEFORE INSTALLATION OF CABLE OR WIRE.

ENDS OF CONDUIT INSTALLED BELOW GRADE FOR FUTURE USE SHALL BE CAPPED IF METALLIC OR PLUGGED IF NONMETALLIC.

WHEN REQUIRED TO CONNECT NONMETALLIC CONDUIT TO METALLIC CONDUIT, ONLY ADAPTER FITTINGS, U.L. LISTED FOR ELECTRICAL USE, SHALL BE USED.

IF A BASE REQUIRES A DEEP FORM BECAUSE OF LOOSE DIRT OR FILL, THE FORM SHALL BE REMOVED BEFORE BACKFILLING AROUND THE BASE. BACKFILL SHALL BE TAMPED TIGHT AGAINST THE BARE CONCRETE BASE IN LAYERS OF 1 FOOT OR LESS.

A NO. 4 AWG, STRANDED COPPER EQUIPMENT GROUNDING CONDUCTOR SHALL BE EXOTHERMICALLY WELDED TO THE EQUIPMENT GROUNDING ELECTRODE (GROUND ROD) FOR TYPE 1, TYPE 2, TYPE 5, AND TYPE 6 BASES.

THE EQUIPMENT GROUNDING CONDUCTOR SHALL BE FURNISHED AND INSTALLED TO ENTER THE BASE OF THE TYPE 2 AND TYPE 5 BASES THROUGH A 1 INCH CONDUIT INSTALLED FOR GROUNDING PURPOSES, LEAVING A 4 FOOT COIL OF WIRE ABOVE THE CONCRETE BASE. THE EQUIPMENT GROUNDING CONDUCTOR SHALL BE NEATLY COILED AND THE COILS TIED TOGETHER.

ANCHOR RODS SHALL BE THREADED 12" IN LENGTH ON EACH END OF THE ROD. ANCHOR RODS SHALL BE MANUFACTURED IN ACCORDANCE WITH SECTION 654.2.1 OF THE STANDARD SPECIFICATIONS.

WASHERS AND LOCK WASHERS ARE REQUIRED ON ALL ANCHOR RODS.

WHEN ANCHOR RODS USING THE ALTERNATE "L" BEND ARE FURNISHED, THE 4" "L" BEND SHALL BE IN ADDITION TO THE SPECIFIED ANCHOR ROD BAR LENGTH. THE "L" BEND END SHALL NOT BE THREADED.

ANCHOR RODS SHALL BE INSTALLED WITH MISALIGNMENTS OF LESS THAN 1:40 FROM VERTICAL.

WELDING OF THE ANCHOR RODS TO THE CAGE IS UNACCEPTABLE. TIE WIRES SHALL BE USED.

BAR STEEL REINFORCEMENT SHALL BE COATED WITH POWDERED EPOXY RESIN IN ACCORDANCE WITH SECTION 505 OF THE STANDARD SPECIFICATIONS (LATEST EDITION).

(1) THE MINIMUM DEPTH OF CONDUIT EXITING THE CONCRETE BASE AND INSTALLED BELOW THE TRAVELED WAY SHALL BE 24 INCHES. THE MINIMUM DEPTH OF CONDUIT EXITING THE CONCRETE BASE THAT IS NOT INSTALLED BELOW THE TRAVELED WAY SHALL BE 18 INCHES. THE MAXIMUM DEPTH OF ALL CONDUIT SHALL BE 36 INCHES EXCEPT WITH WRITTEN APPROVAL BY THE ENGINEER.

(2) (4) 1" DIA. X 3'-6" ANCHOR RODS.

(3) (4) 1" DIA. X 5'-0" ANCHOR RODS.

(4) (6) NO. 6 X 6'-8" BAR STEEL REINFORCEMENT.

(5) (7) NO. 4 X 5'-1" BAR STEEL REINFORCEMENT @ 1'-0" C-C.

(6) (4) 1" DIA. X 3'-6" ANCHOR RODS.

(7) (6) NO.4 X 4'-8" BAR STEEL REINFORCEMENT.

(8) (5) NO. 4 X 5'-1" BAR STEEL REINFORCEMENT @ 1'-0" C-C.

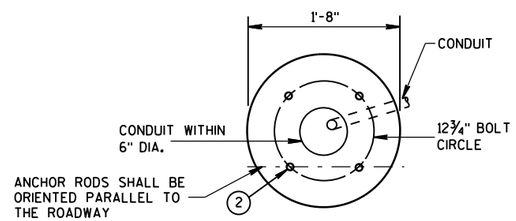

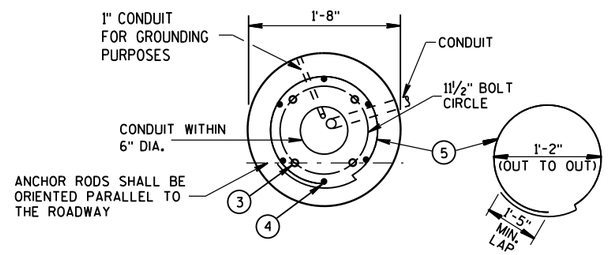

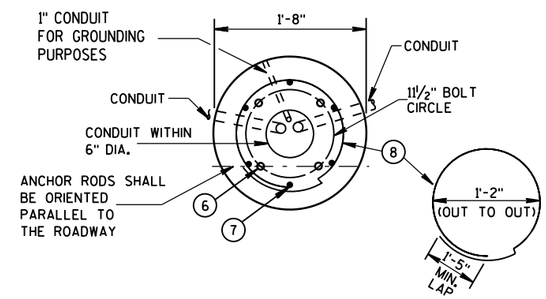

FORM ALL EXPOSED CONCRETE. PROVIDE 1" CHAMFER ALL AROUND

HALF SECTION IN UNPAVED AREA

(TYPICAL FOR TYPES 1, 2, 5, & 6)

HALF SECTION IN PAVEMENT

(TYPICAL FOR TYPES 1, 2, 5, & 6)

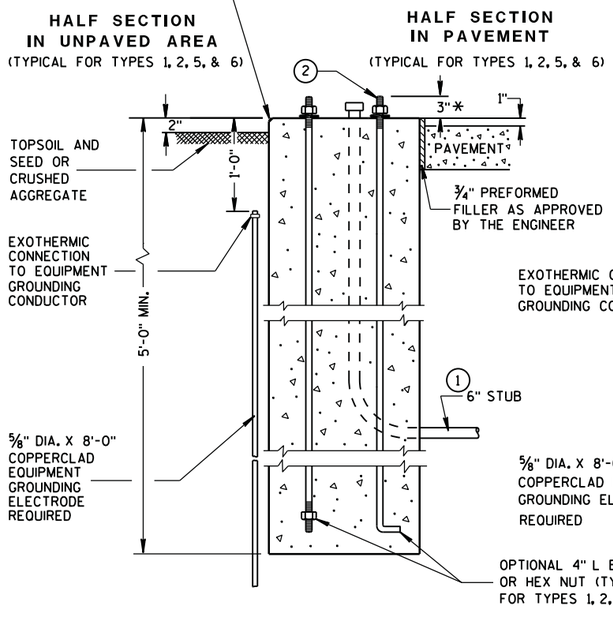

FORM ALL EXPOSED CONCRETE. PROVIDE 1" CHAMFER ALL AROUND

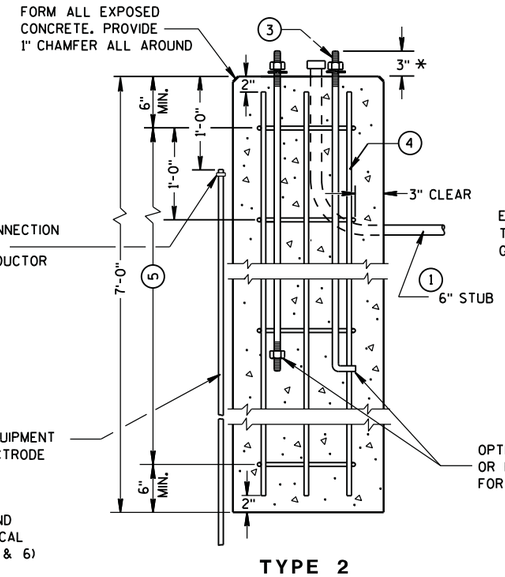

TYPE 2

FORM ALL EXPOSED CONCRETE. PROVIDE 1" CHAMFER ALL AROUND

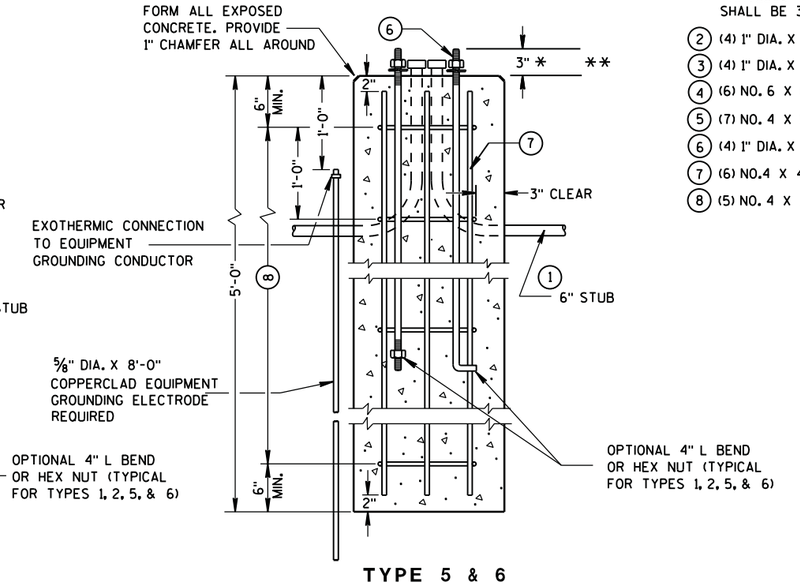

TYPE 5 & 6

CONCRETE BASES

* ANY ANCHOR ROD PROJECTION SHORTER THAN 2¾" OR LONGER THAN 3¼" SHALL REQUIRE THE BASE TO BE REMOVED AND REPLACED AT THE CONTRACTORS EXPENSE.

** FOR NONBREAKAWAY INSTALLATIONS, 4½" ± ANCHOR ROD PROJECTION WITH THE USE OF LEVELING NUTS. RODENT SCREEN REQUIRED.

CONCRETE BASES, TYPES 1, 2, 5, & 6

STATE OF WISCONSIN
DEPARTMENT OF TRANSPORTATION

APPROVED
Sept. 2014 — /S/ Ahmet Demirbilek
DATE — STATE ELECTRICAL ENGINEER
FHWA

6

S.D.D. 9 C 2-7

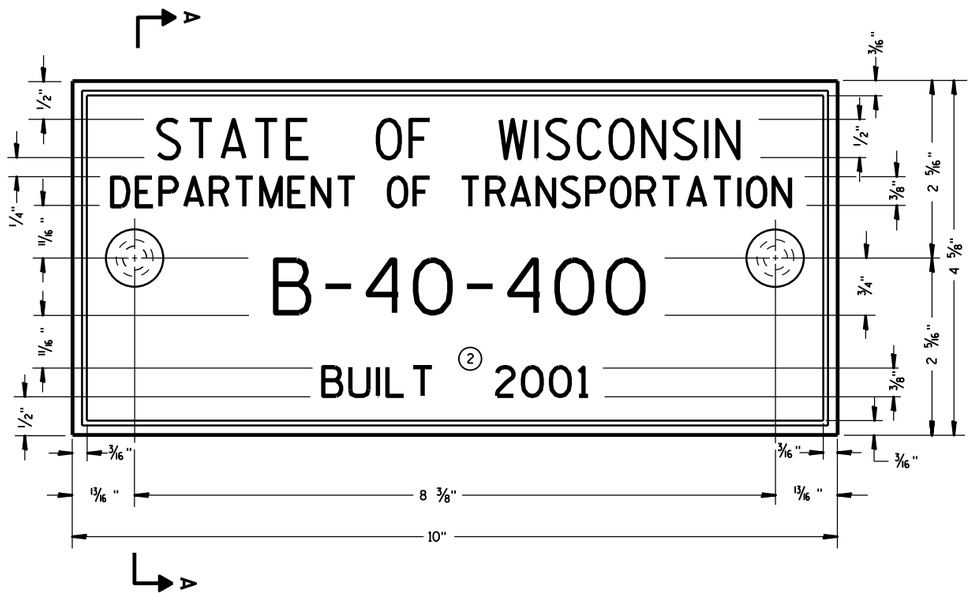

TYPICAL NAME PLATE
(BRIDGES, CULVERTS, AND RETAINING WALLS)

GENERAL NOTES

NAME PLATES TO BE INSTALLED ON BRIDGES, CULVERTS, AND RETAINING WALLS SHALL CONFORM TO THE REQUIREMENTS OF SECTION 502.3.11 OF THE STANDARD SPECIFICATIONS.

THE BRIDGE NUMBER AND YEAR BUILT SHOWN ON THIS DRAWING ARE EXAMPLES ONLY. SEE CONSTRUCTION PLANS FOR INDIVIDUAL NUMBERING AND YEAR BUILT.

① EPOXY RESIN SHALL BE FROM AN APPROVED MANUFACTURER AND USED IN ACCORDANCE WITH MANUFACTURER'S RECOMMENDATIONS.

② REHABILITATION OF AN EXISTING STRUCTURE SHOULD USE THE DATE OF ORIGINAL STRUCTURE CONSTRUCTION.

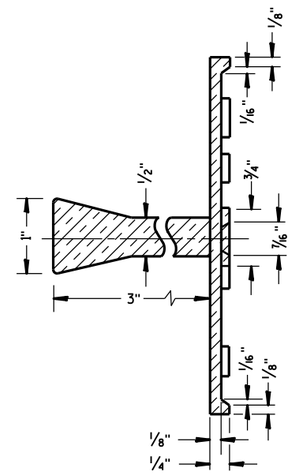

SECTION A-A

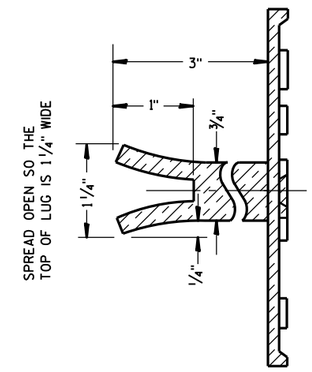

ALTERNATE LUG

6

6

FOR MULTI-UNIT STRUCTURES
LINE 3 ABOVE SHALL READ

B = BRIDGE
C = CULVERT
R = RETAINING WALL

COUNTY NO.

BRIDGE NO.

UNIT NO. FOR MULTIPLE
UNIT BRIDGE

B-40-400-1A

NUMBERING DESIGNATION
MULTI-UNIT STRUCTURES

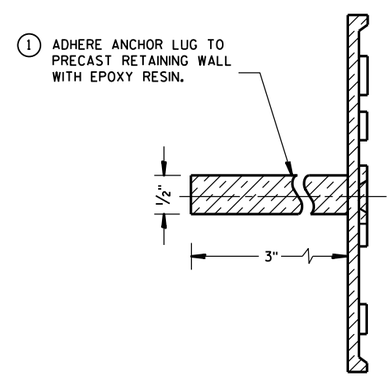

ALTERNATE LUG
(FOR ATTACHMENT TO PRECAST STRUCTURES)

NAME PLATE (STRUCTURES)	
STATE OF WISCONSIN DEPARTMENT OF TRANSPORTATION	
APPROVED 3/26/10 DATE	/S/ Scot Becker CHIEF STRUCTURAL DEVELOPMENT ENGINEER
FHWA	

S.D.D. 12 A 3-10

*(RS) = REINFORCED CONCRETE SLAB
*(PS) = PAVED CONCRETE SHOULDER OR CONCRETE DRAINAGE SLAB (SEE DETAILS ELSEWHERE IN THE PLAN)
*(NRS) = NON-REINFORCED CONCRETE SLAB

***STANDARD DOWEL BAR DIAMETER (SEE SDD 13C11, & SDD 13C13)

Ⓐ STANDARD CONTRACTION JOINT NORMAL TO ℄ OR ℄
Ⓑ STANDARD LONGITUDINAL JOINT WITH TIE BARS.
Ⓒ 1½" EXPANSION JOINT WITH DOWEL BARS NORMAL TO ℄ OR ℄

GENERAL NOTES

THE CONTRACTOR MAY SPLICE NO. 6 BARS IN THE APPROACH SLAB FOR SKEWED STRUCTURES ONLY. STAGGER SPLICES WITH A MAXIMUM OF ONE SPLICE PER BAR. THE LENGTH OF LAP IS 20 INCHES.

TACK WELD DOWEL BARS TO THE BASKETS ON ALTERNATE ENDS.

① THE CONTRACTOR MAY USE NO. 4 BARS SPACED AT 2'-0" C-C IN BOTH THE LONGITUDINAL AND TRANSVERSE DIRECTIONS FOR TOP REINFORCEMENT AS AN ALTERNATIVE TO THE WELDED WIRE FABRIC.

② THE CONTRACTOR MAY OMIT TIE BARS BETWEEN REINFORCED SLABS WHERE SLAB REINFORCEMENT BARS EXTEND ACROSS THE CENTERLINE OR REFERENCE LINE.

③ DO NOT CONSTRUCT AN EXPANSION JOINT OR INSTALL DOWEL BARS WHEN ABUTTING AN HMA PAVEMENT.

④ USE A JOINT SEALANT MEETING THE REQUIREMENTS OF ASTM D6690.

⑤ PLACE EXPANSION CAP ON THE END OF THE DOWEL THAT IS NOT TACK WELDED TO THE BASKET. DO NOT FORCE DOWEL BAR PAST THE DOWEL STOP.

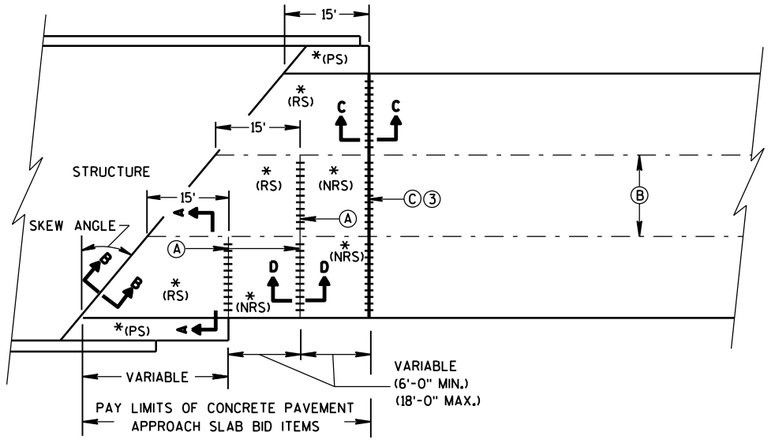

SKEWED APPROACH
(PAVEMENT MORE THAN 2 LANES)

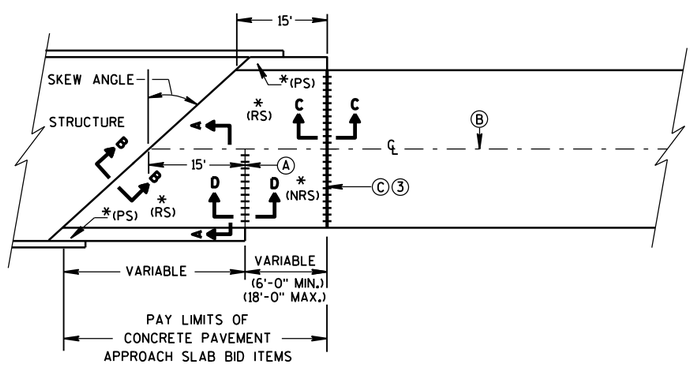

SKEWS >20°
(PAVEMENT WIDTH ≤30')

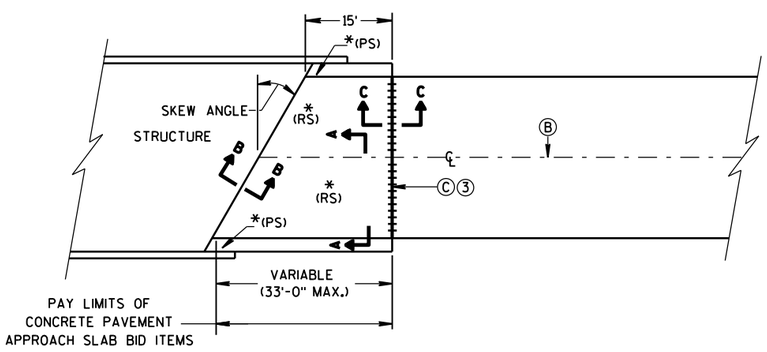

SKEWS ≤20°
(PAVEMENT WIDTH ≤30')

APPROACH SLAB AND ADJACENT PAVEMENT

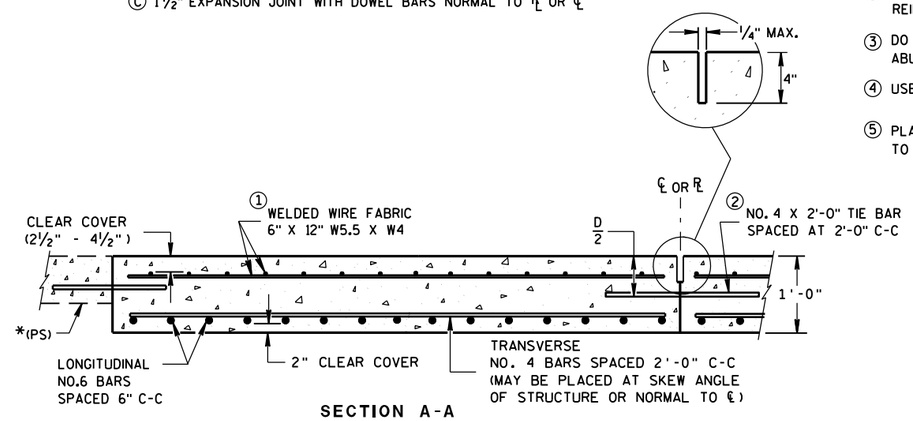

SECTION A-A
REINFORCEMENT POSITIONING DETAIL

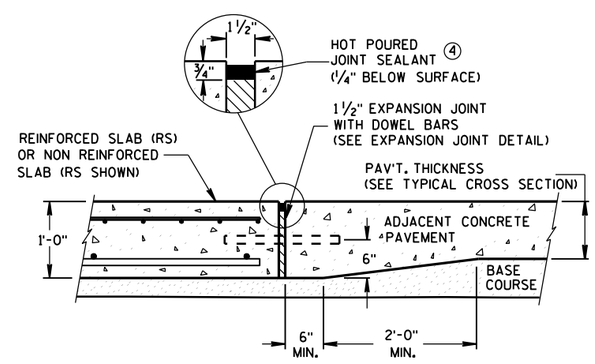

SECTION C-C
TRANSITION DETAIL
APPROACH SLAB TO ADJACENT PAVEMENT

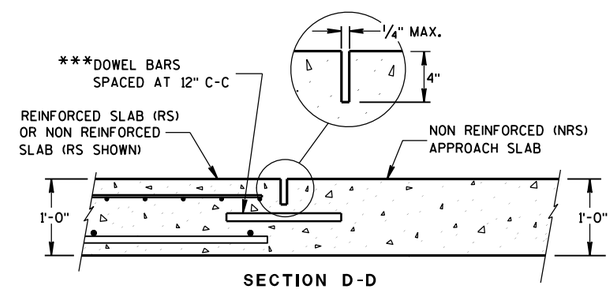

SECTION D-D
CONTRACTION JOINT

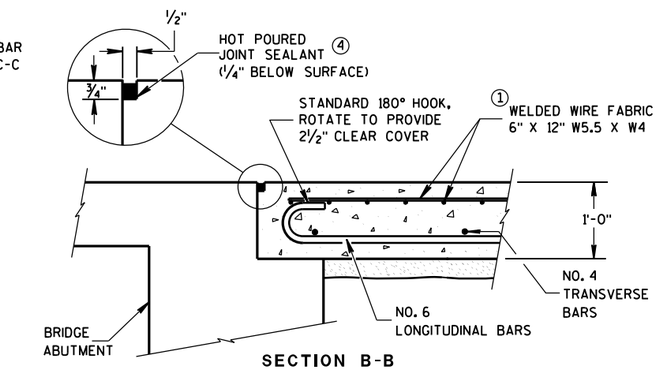

SECTION B-B
BEND DETAIL
BOTTOM REINFORCEMENT

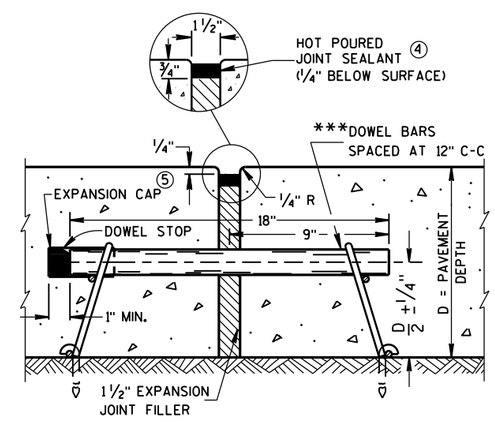

EXPANSION JOINT DETAIL

CONCRETE PAVEMENT APPROACH SLAB	
STATE OF WISCONSIN DEPARTMENT OF TRANSPORTATION	
APPROVED June, 2015 DATE	/S/ Peter Kemp, P.E. PAVEMENT SUPERVISOR
FHWA	

6

6

S.D.D. 13 B 2-8a

S.D.D. 13 B 2-8a

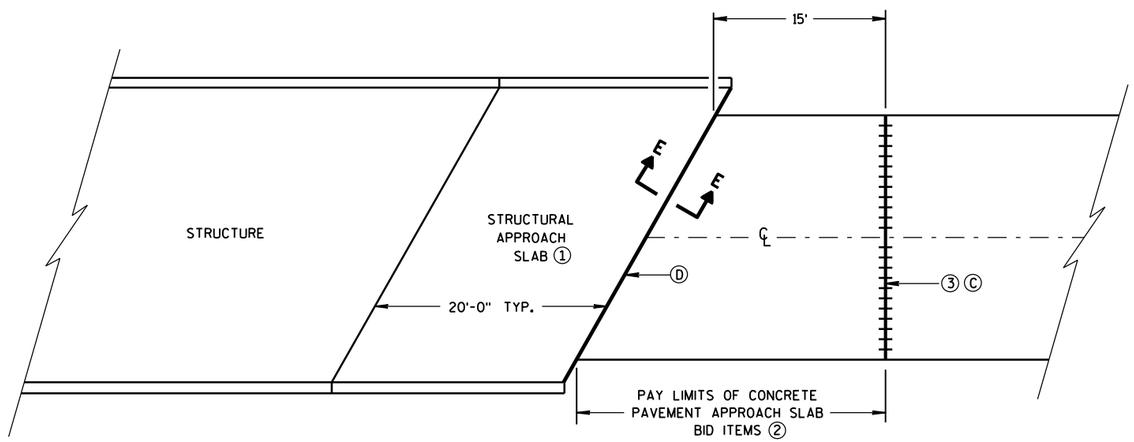

GENERAL NOTES

ALL PROJECTS THAT INVOLVE A STRUCTURAL APPROACH SLAB WILL ALSO HAVE A CONCRETE PAVEMENT APPROACH SLAB.

① SEE BRIDGE PLAN.

② CONFORM TO SHEET 13 B 2(A) FOR CONCRETE PAVEMENT APPROACH SLAB DETAILS.

③ DO NOT CONSTRUCT AN EXPANSION JOINT OR INSTALL DOWEL BARS WHEN ABUTTING AN HMA PAVEMENT.

Ⓒ 1½" EXPANSION JOINT WITH DOWEL BARS NORMAL TO ℞ OR ℄

Ⓓ 1½" EXPANSION JOINT (NO DOWELS)

BRIDGE APPROACHES

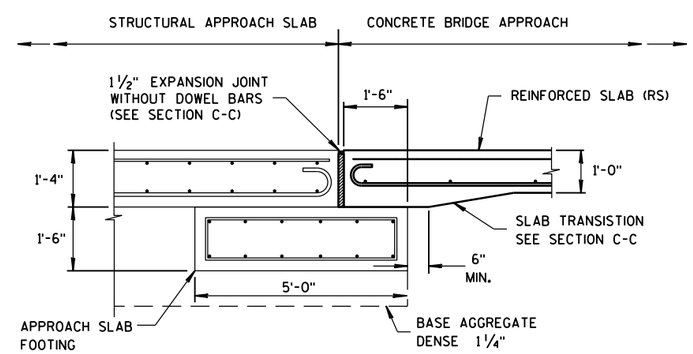

SECTION E-E

FOOTING DETAIL

STRUCTURAL APPROACH SLAB TO CONCRETE BRIDGE APPROACH

STRUCTURAL APPROACH SLAB AND CONCRETE PAVEMENT APPROACH SLAB
STATE OF WISCONSIN DEPARTMENT OF TRANSPORTATION
APPROVED June, 2015 DATE — /S/ Peter Kemp, P.E. PAVEMENT SUPERVISOR — FHWA

6
S.D.D. 13 B 2-8b

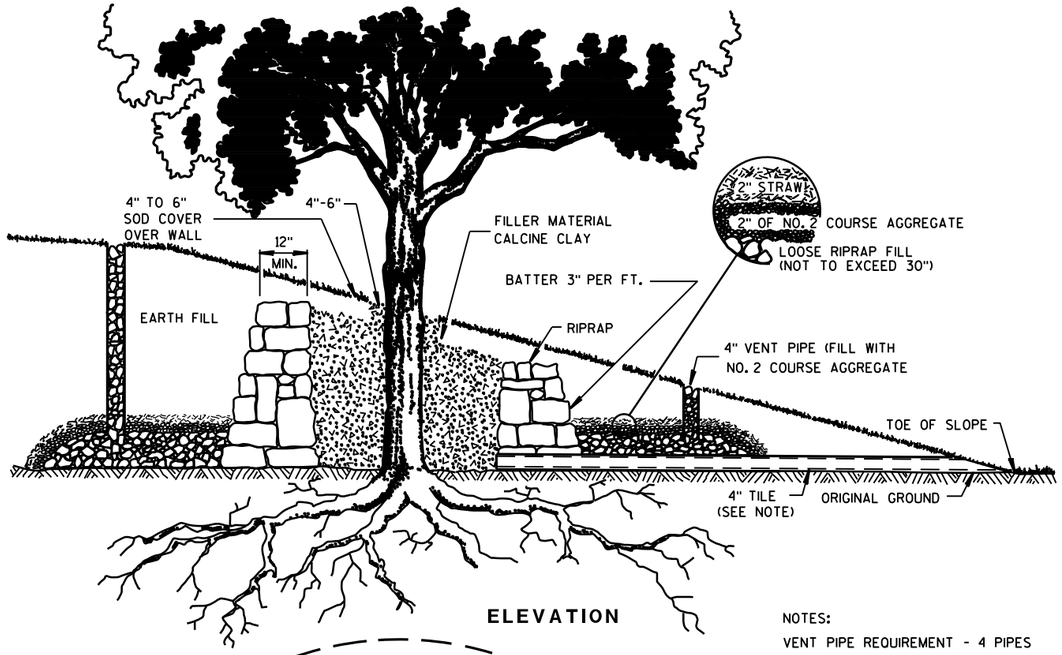

ELEVATION

NOTES:

VENT PIPE REQUIREMENT - 4 PIPES FOR TRUNK DIAMETER LESS THAN 6". FIVE (+ 1 FOR EACH ADDITIONAL 6" OF TREE TRUNK) FOR TRUNK DIAMETER 6" OR GREATER.

DRAIN TILE SHOULD BE PROVIDED IF DISTANCE FROM TREE TO TOE OF SLOPE IS OVER 5'.

MEASURE TREE TRUNK AT A HEIGHT 4'-6' ABOVE ORIGINAL GROUND LINE.

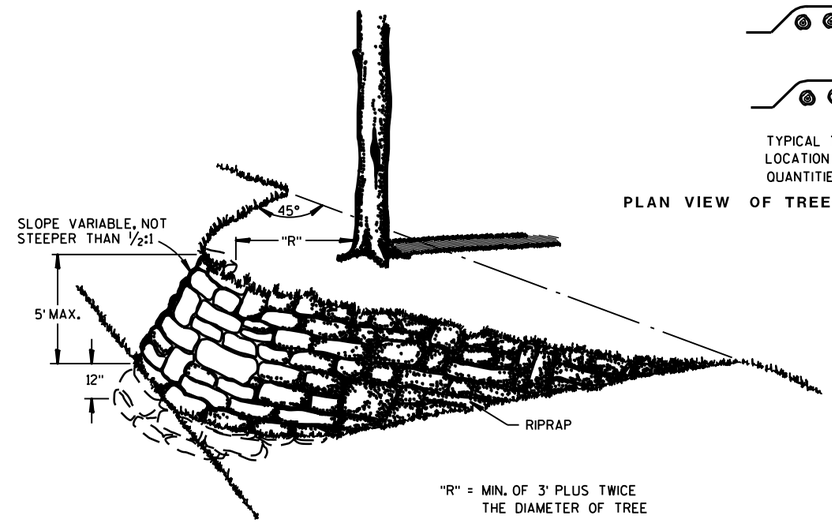

DETAILS OF TREE ISLAND AND ROOT PROTECTION

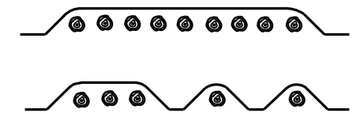

TYPICAL TREATMENTS OF ROOT PROTECTION. LOCATION SHOWN ON MISCELLANEOUS QUANTITIES SHEET.

PLAN VIEW OF TREE ISLANDS FOR ONE OR MORE TREES

GENERAL NOTES

WALLS TO BE BUILT TO APPROXIMATE SHAPE AND DIMENSIONS SHOWN. STONE TO CONFORM TO SPECIFICATIONS FOR RIPRAP.

DETAILED DRAWINGS OF PROPOSED ALTERNATE DESIGNS SHALL BE SUBMITTED TO THE ENGINEER FOR APPROVAL.

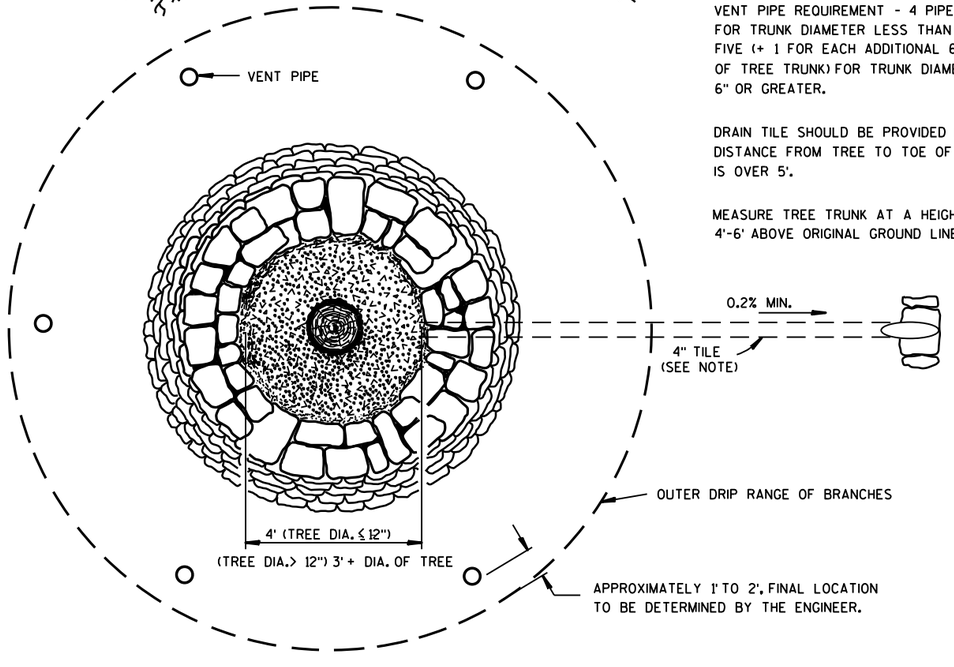

PLAN

FULL TREE WELL WITH RIPRAP WALL

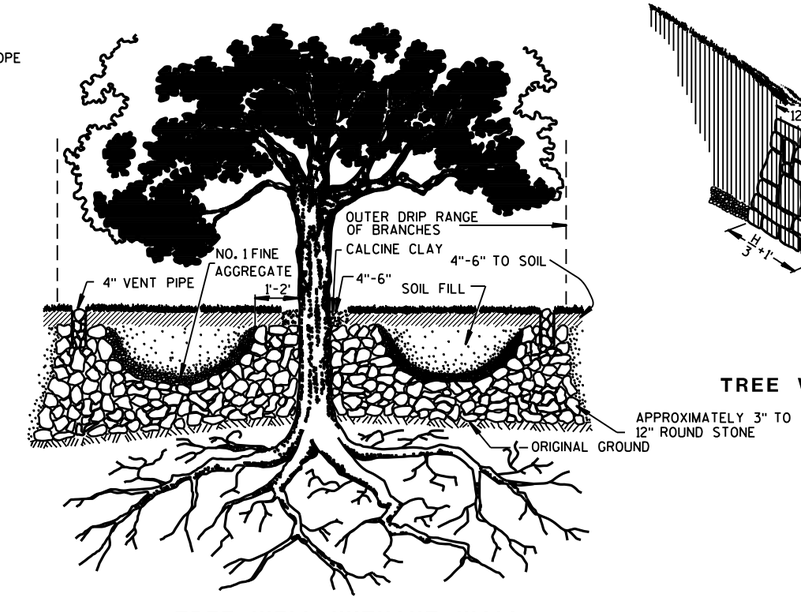

TREE WELL WITHOUT WALL

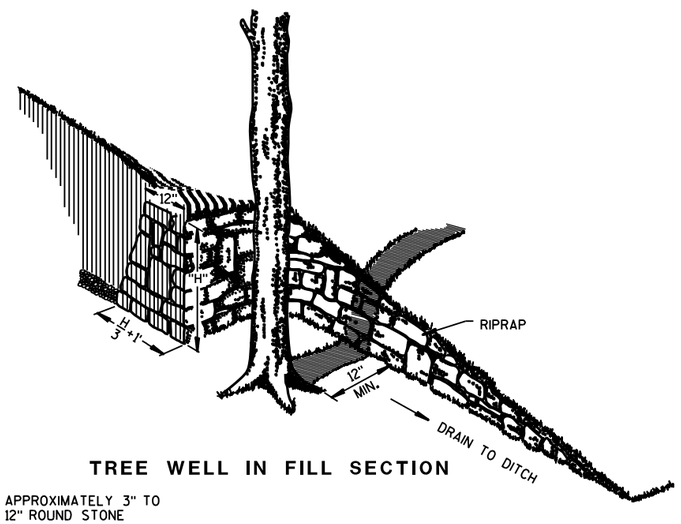

TREE WELL IN FILL SECTION

DETAILS FOR TREE WELLS

TREE PRESERVATION DETAILS	
STATE OF WISCONSIN DEPARTMENT OF TRANSPORTATION	
APPROVED 8/25/76 DATE	/S/ D. L. Strand STATE DESIGN ENGINEER FOR FHWA
FHWA	

6

6

S.D.D. 14 A 1-3

S.D.D. 14 A 1-3

14A2: Tree Planting Detail

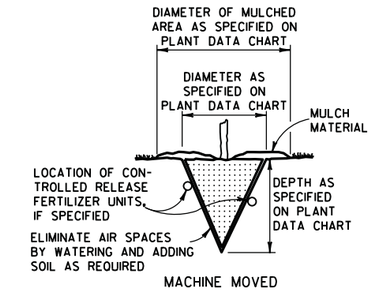

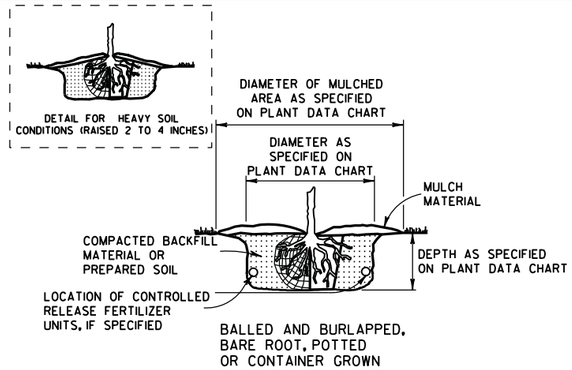

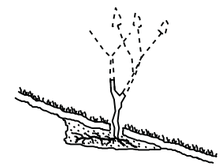

ACCOMMODATE ROOTS
(SMOOTH AND STAGHORN SUMAC)

NOTE:
1) ENGINEER SHALL REQUIRE 3 SLITS IN POT TO SPEED DETERIORATION
2) METAL, PLASTIC OR OTHER NONDEGRADABLE POTS SHALL BE REMOVED PRIOR TO PLANTING

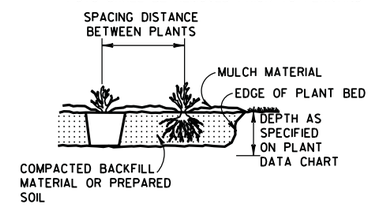

PREPARED BED
(BARE ROOT AND POTTED)

PLANTING

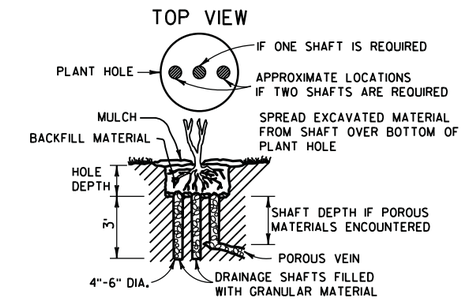

NOTE:
DRAINAGE SHAFT AS SPECIFIED ON PLANT DATA CHART

DRAINING

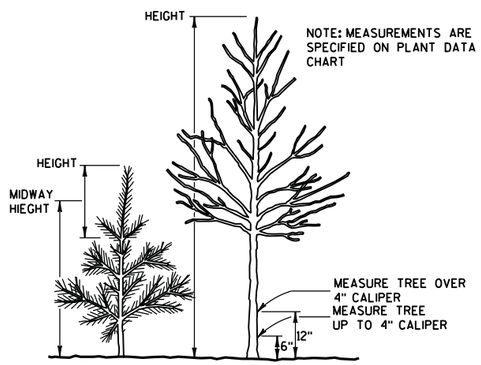

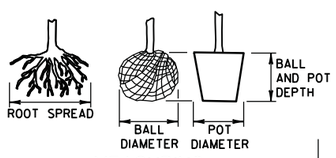

MEASURING

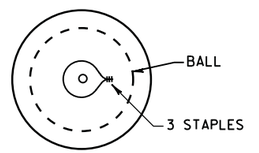

TOP VIEW

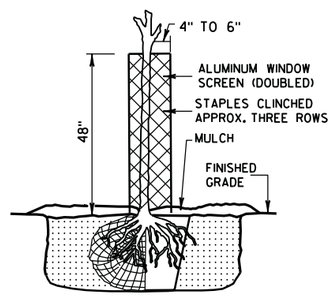

RODENT PROTECTION

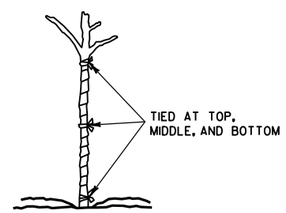

WRAPPING

NOTE: WHEN PRUNING, PRESERVE CHARACTER AND SHAPE OF TREE. AVOID LEAVING STUBS - REMOVE BRANCH OR TWIG BACK TO THE NEAREST CROTCH
1) PRUNE TO REMOVE DEAD AND BROKEN BRANCHES
2) PRUNE TO REMOVE BRANCHES THAT TOUCH OR ARE TOO CLOSE TO OTHER BRANCHES

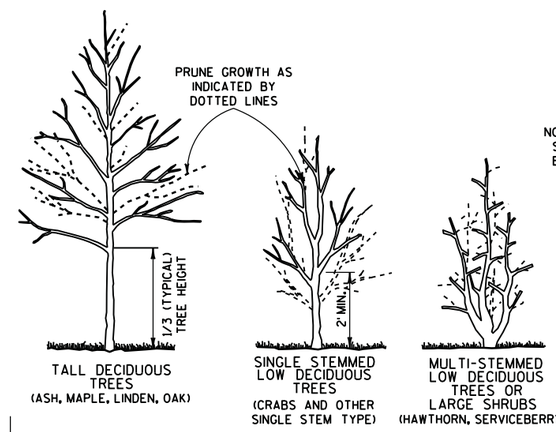

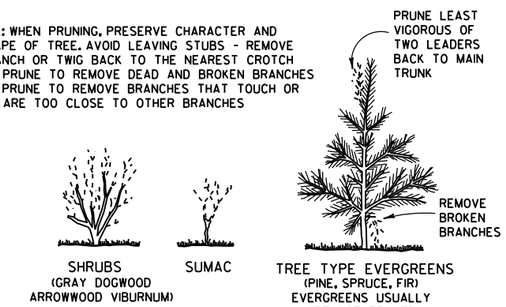

PRUNING

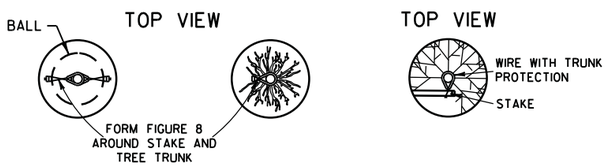

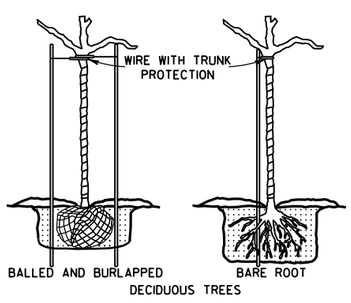

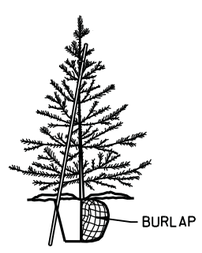

NOTE: BRACING STAKE
1) SHALL BE DRIVEN INTO THE GROUND AS CLOSE TO THE TREE AS POSSIBLE WITHOUT DAMAGING THE BRANCHES.
2) MAY BE DRIVEN AT SUCH AN ANGLE THAT IT DOES NOT PENETRATE THE BALL OR POT.
3) SHALL NOT PROTRUDE ABOVE THE TOP OF THE TREE; AND
4) SHALL HAVE A HOLE NEAR THE TOP TO HOLD THE WIRE IN PLACE.

BRACING

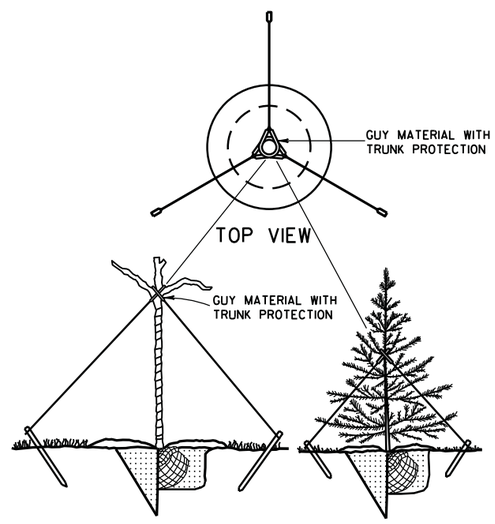

GUYING

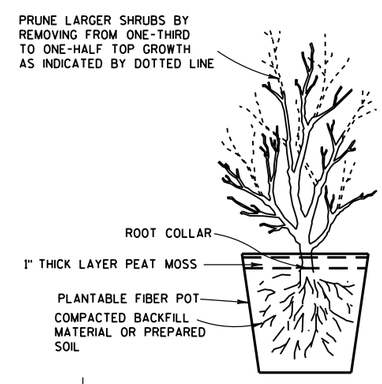

POTTING

NOTES

DETAILS OF CONSTRUCTION NOT SHOWN ON THIS DRAWING SHALL CONFORM TO THE PERTINENT REQUIREMENTS OF THE STANDARD SPECIFICATIONS AND THE APPLICABLE SPECIAL PROVISIONS.

BRACING, WRAPPING, GUYING, RODENT PROTECTION, FERTILIZER AND MULCH SHALL BE USED ONLY WHEN SPECIFIED ON THE PLANT DATA CHART (PART OF PLAN) OR SPECIAL PROVISIONS.

TREE PLANTING DETAIL

STATE OF WISCONSIN
DEPARTMENT OF TRANSPORTATION

APPROVED
4/11/94 — DATE
/S/ Rory L. Rhinesmith — CHIEF METHODS DEVELOPMENT ENGINEER
FHWA

S.D.D. 14 A 2-1

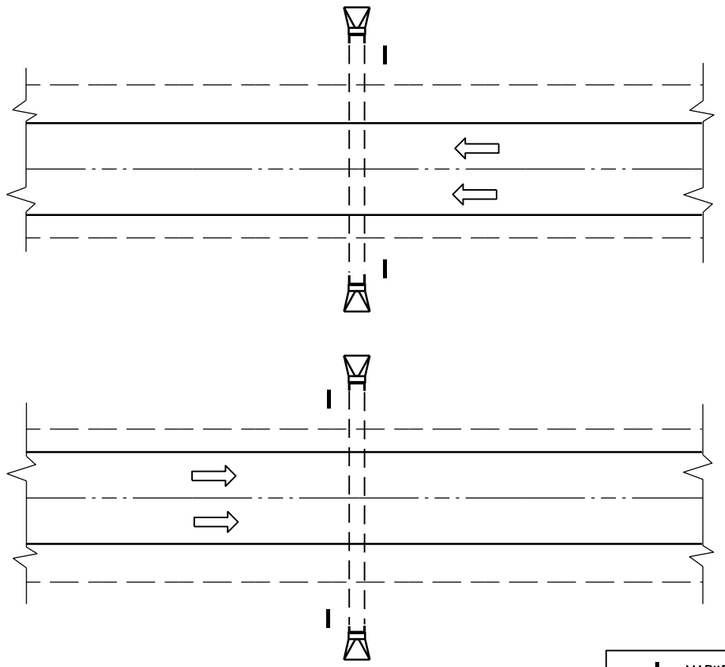

PLAN VIEW

DIVIDED HIGHWAY

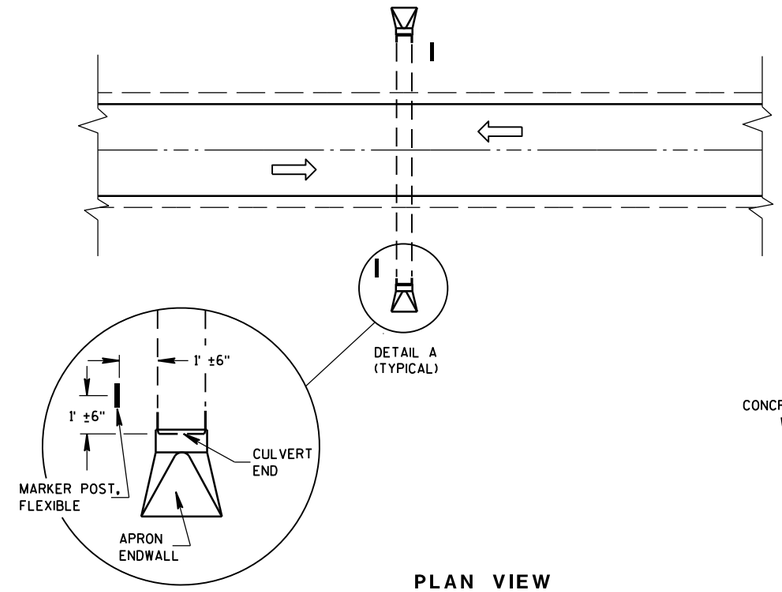

DETAIL A
(TYPICAL)

PLAN VIEW

UNDIVIDED HIGHWAY

MARKER POST, FLEXIBLE

DIRECTION OF TRAFFIC FLOW

GENERAL NOTES

DETAILS OF CONSTRUCTION, MATERIALS AND WORKMANSHIP NOT SHOWN ON THIS DRAWING SHALL CONFORM TO THE PERTINENT REQUIREMENTS OF THE STANDARD SPECIFICATIONS AND THE APPLICABLE SPECIAL PROVISIONS.

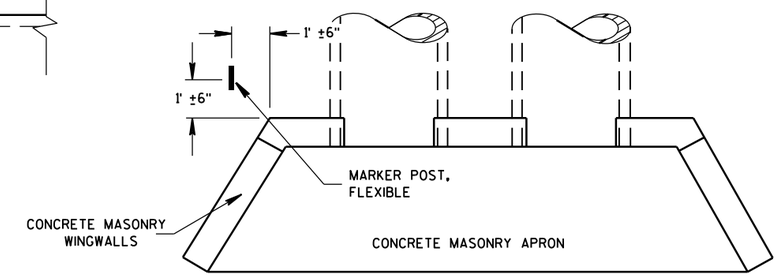

PLAN VIEW

CONCRETE MASONRY ENDWALLS FOR CULVERT PIPE AND PIPE ARCH

FLEXIBLE MARKER POST LOCATION

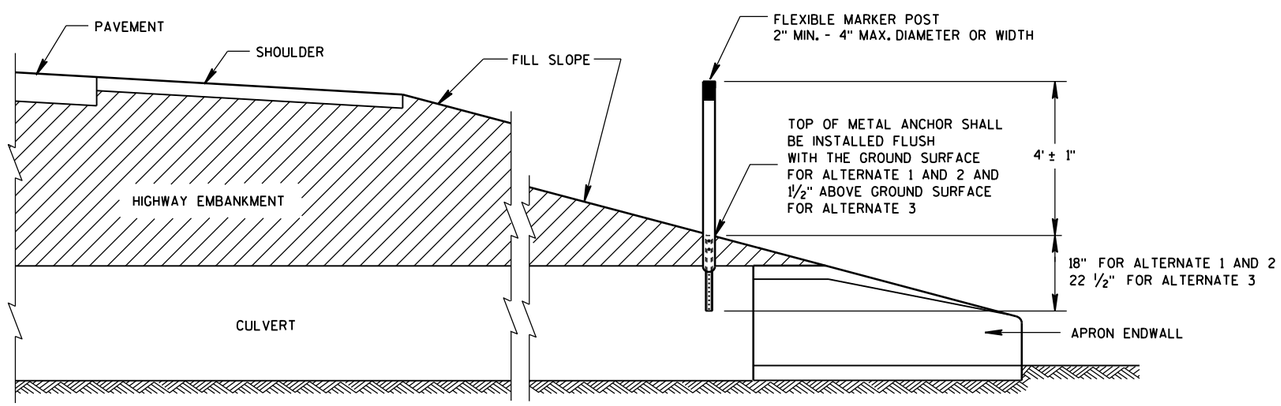

CROSS SECTION

FLEXIBLE MARKER POST

FLEXIBLE MARKER POST FOR CULVERT END

STATE OF WISCONSIN
DEPARTMENT OF TRANSPORTATION

6

6

S.D.D. 15 A 3-2a

S.D.D. 15 A 3-2a

15A3 sheet b: Flexible Marker Post for Culvert End

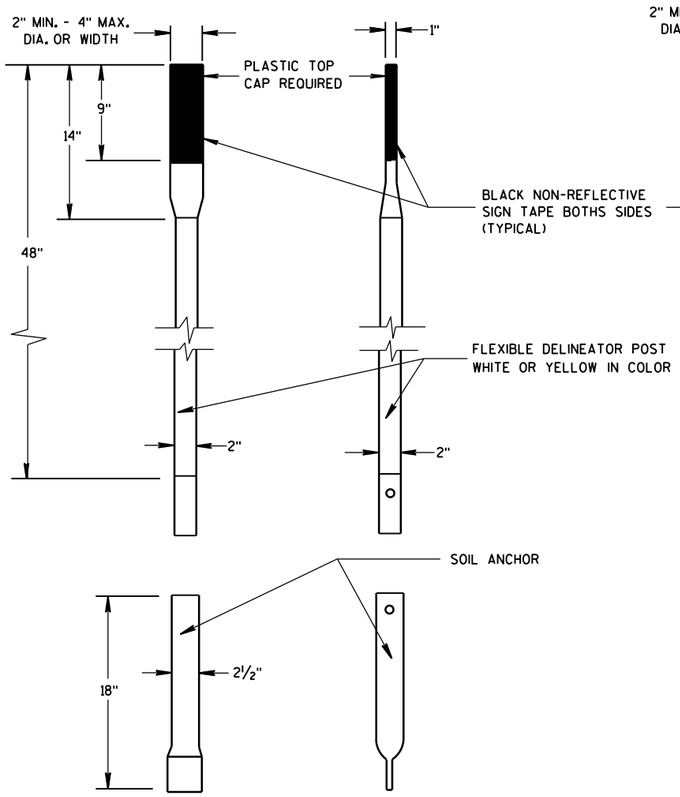

FRONT VIEW SIDE VIEW

ALTERNATE 1

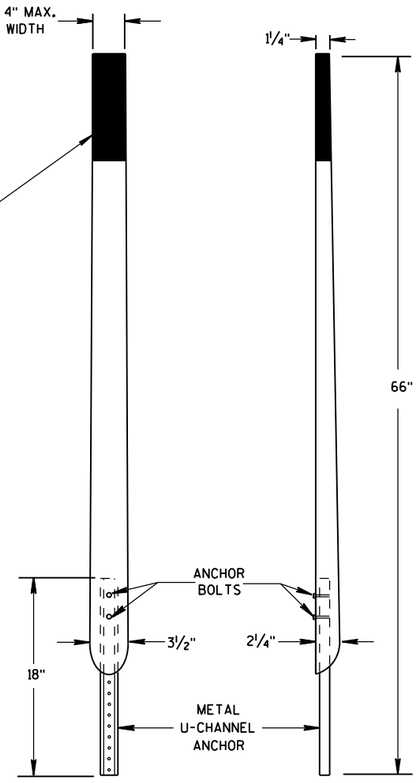

FRONT VIEW SIDE VIEW

ALTERNATE 2

FLEXIBLE MARKER POSTS

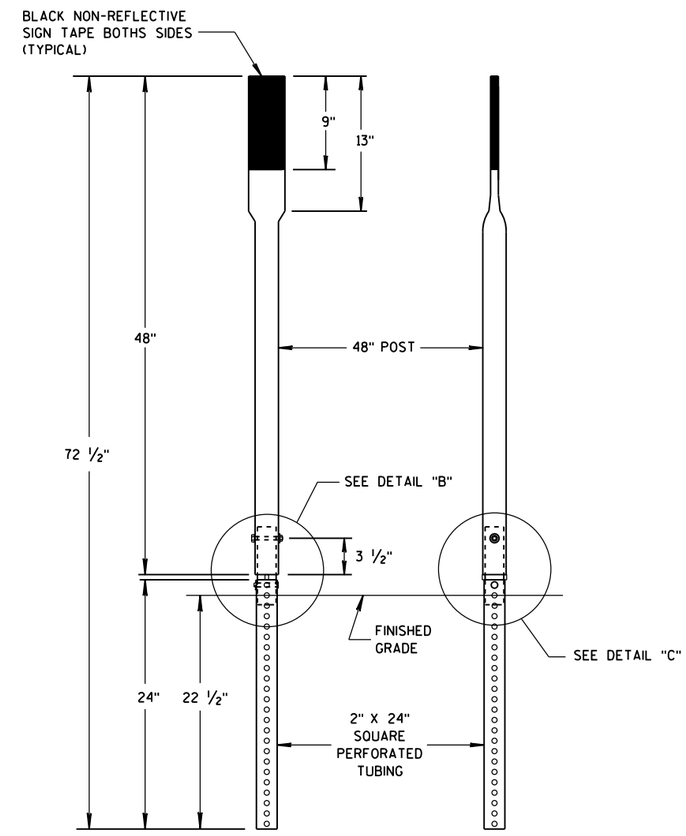

FRONT VIEW SIDE VIEW

ALTERNATE 3

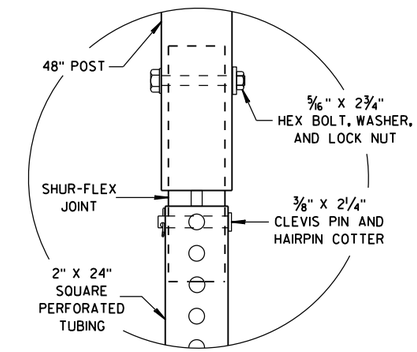

DETAIL B

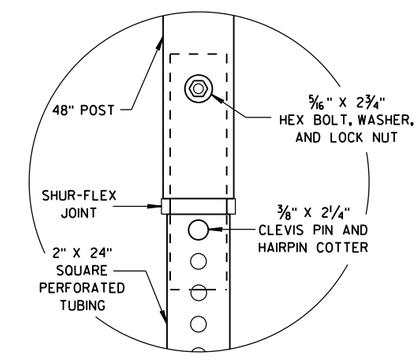

DETAIL C

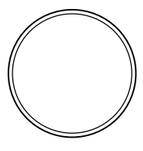

SECTION A-A

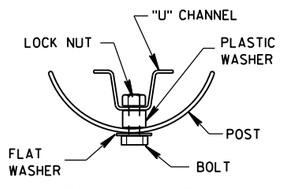

SECTION B-B

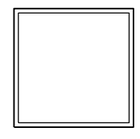

SECTION C-C

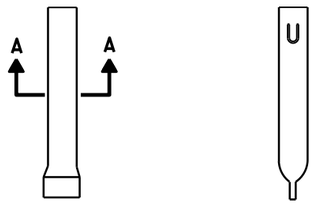

FRONT VIEW SIDE VIEW

ALTERNATE 1

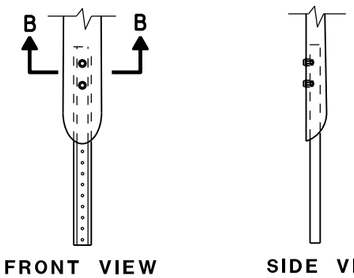

FRONT VIEW SIDE VIEW

ALTERNATE 2

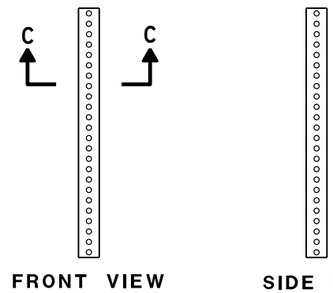

FRONT VIEW SIDE VIEW

ALTERNATE 3

FLEXIBLE MARKER POST ANCHORS

FLEXIBLE MARKER POST
FOR CULVERT END

STATE OF WISCONSIN
DEPARTMENT OF TRANSPORTATION

APPROVED
10/1/2012 — DATE
/S/ Travis Feltes — STATE TRAFFIC ENGINEER OF DESIGN
FHWA

6

S.D.D. 15 A 3-2b

6

S.D.D. 15 A 3-2b

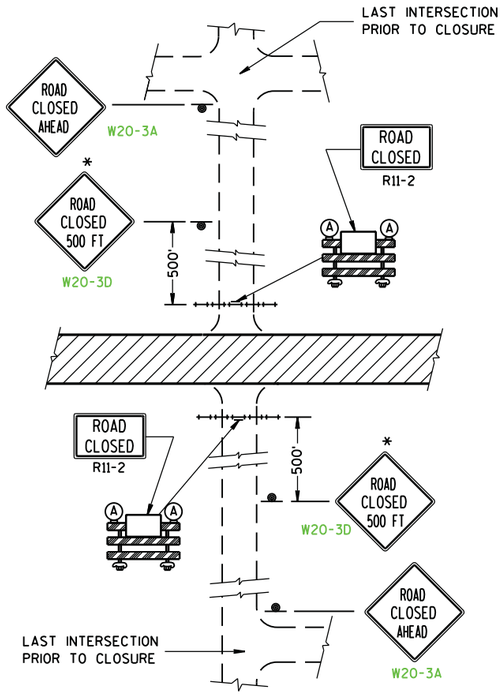

DETAIL 1

(NO ACCESS TO PROJECT)

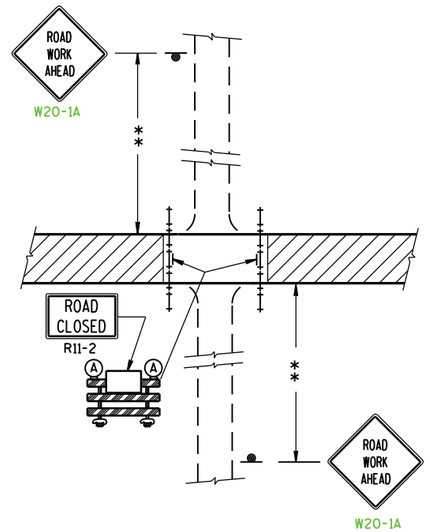

DETAIL 2

(PUBLIC CROSS-TRAFFIC MAINTAINED.
NO ACCESS TO PROJECT).

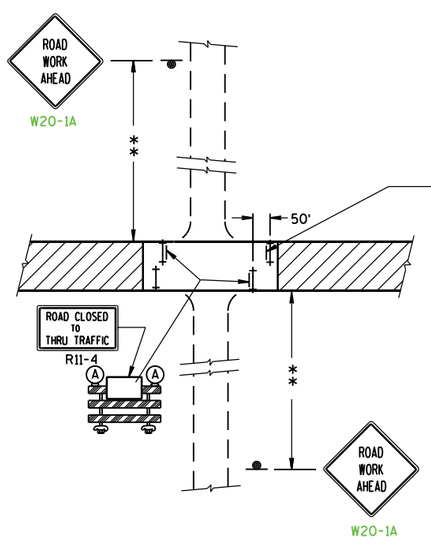

DETAIL 3

(PUBLIC CROSS-TRAFFIC MAINTAINED. CONTRACTOR,
LOCAL BUSINESS AND RESIDENT ACCESS).

FOR BRIDGE OR CULVERT
REPLACEMENT, USE ADDITIONAL
SIGN ON BARRICADE

BRIDGE OUT
XX MILES AHEAD
R11-3C

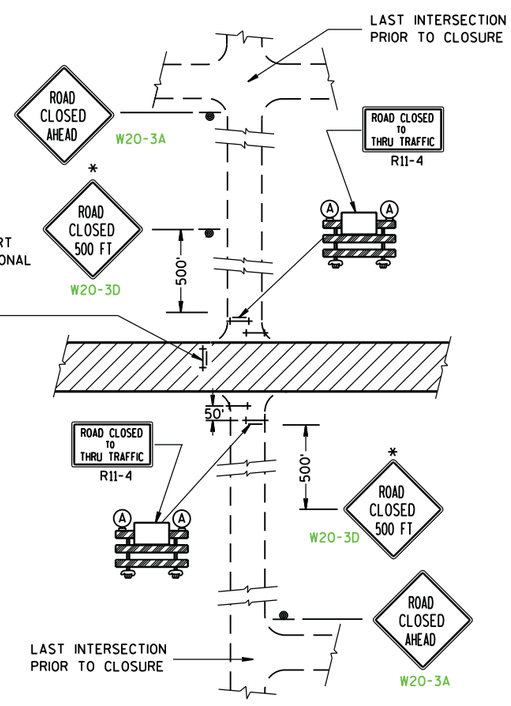

DETAIL 4

(CONTRACTOR, LOCAL BUSINESS AND
RESIDENT ACCESS TO PROJECT)

GENERAL NOTES

THE EXACT NUMBER, LOCATION, AND SPACING OF ALL SIGNS AND BARRICADES SHALL BE ADJUSTED TO FIT FIELD CONDITIONS AS APPROVED BY THE ENGINEER.

ANY SIGNS TEMPORARY OR EXISTING, WHICH CONFLICT WITH TRAFFIC CONTROL "IN USE" SHALL BE REMOVED OR COVERED AS NEEDED AND AS APPROVED BY THE ENGINEER.

THE SPACING BETWEEN TRAFFIC CONTROL SIGNS SHOULD BE ADJUSTED TO NOT CONFLICT WITH AND SHOULD PROVIDE A DESIRABLE MINIMUM OF 200 FEET CLEARANCE TO EXISTING SIGNS THAT WILL REMAIN IN PLACE.

IF A "STOP" SIGN MUST BE REMOVED FOR A WORK OPERATION, A TEMPORARY "STOP" SIGN SHALL BE PLACED PRIOR TO THE SIGN REMOVAL, OR A FLAGGER SHALL BE PROVIDED UNTIL THE SIGN IS RE-ESTABLISHED.

BARRICADES THAT MUST BE MOVED FOR A WORK OPERATION SHALL BE IMMEDIATELY RE-ESTABLISHED UPON COMPLETION OF THE OPERATION OR, FOR CONTINUING OPERATIONS, AT THE END OF EACH WORKING DAY.

SIGNS THAT WILL BE IN PLACE LESS THAN 7 CONTINUOUS DAYS AND NIGHTS MAY BE MOUNTED ON PORTABLE SUPPORTS.

ALL TYPE III BARRICADES SHALL HAVE RAILS REFLECTORIZED ON BOTH FACES. STRIPES SHALL BE PROPERLY SLOPED DOWN TOWARD THE TRAFFIC SIDE OR AS SHOWN IN THE ROAD CLOSURE BARRICADE DETAIL D FOR FULL ROAD CLOSURES.

TYPE "A" LOW-INTENSITY FLASHING WARNING LIGHTS SHALL BE VISIBLE ON BOTH SIDES OF THE BARRICADE.

THE R11-2, R11-3 AND R11-4 SIGNS PLACED ON BARRICADES SHALL COVER NO MORE THAN THE TOP RAIL. THE SIGNS SHALL NOT COVER ANY PORTION OF THE MIDDLE OR BOTTOM RAILS.

ALL SIGNS SHALL BE 48" X 48" UNLESS OTHERWISE NOTED BELOW:
R11-2 SHALL BE 48" X 30".
R11-4 AND R11-3 SHALL BE 60" X 30".

*OMIT THE "ROAD CLOSED 500 FT." SIGN IF THE LAST INTERSECTION IS 500 FT. OR LESS FROM THE WORK ZONE.

**500' MAX. OR AT LAST INTERSECTION WHICHEVER IS CLOSER.

LEGEND

- SIGN ON PERMANENT SUPPORT
- TYPE III BARRICADE
- TYPE III BARRICADE WITH ATTACHED SIGN
- (A) TYPE "A" WARNING LIGHT (FLASHING)
- WORK AREA

BARRICADES AND SIGNS FOR SIDEROAD CLOSURES

STATE OF WISCONSIN
DEPARTMENT OF TRANSPORTATION

APPROVED

DATE — STATE TRAFFIC ENGINEER — FHWA

6

S.D.D. 15 C 3-3

15C5: Traffic Control, Advance Warning Signs 40 M.P.H. or Less, Two Way Undivided Road Open to Traffic

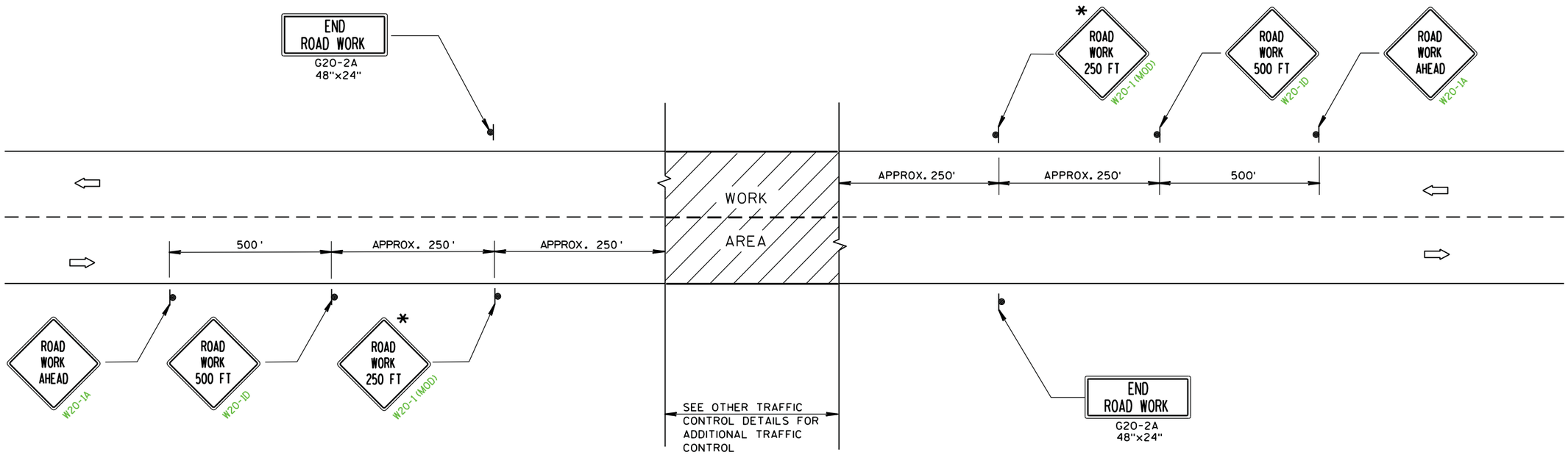

6

TYPICAL SIDEROAD APPROACH WARNING SIGN DETAIL

6

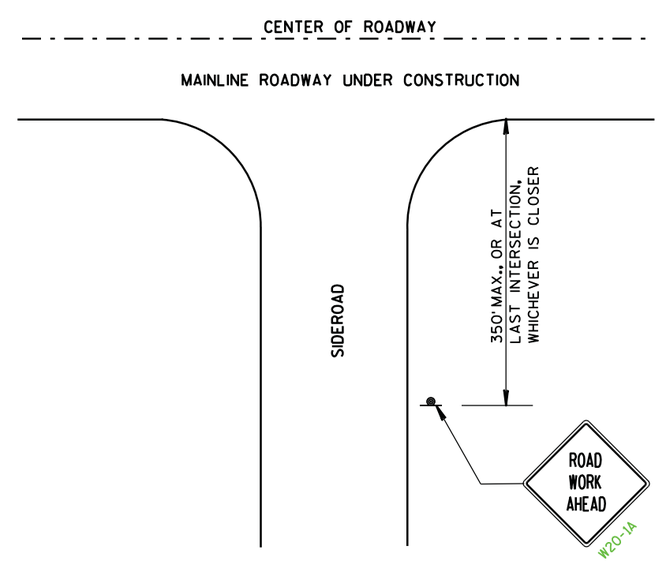

GENERAL NOTES

THE EXACT NUMBER, LOCATION, AND SPACING OF ALL SIGNS AND DEVICES SHALL BE ADJUSTED TO FIT FIELD CONDITIONS.

THE SPACING BETWEEN TRAFFIC CONTROL SIGNS SHOULD BE ADJUSTED TO NOT CONFLICT WITH AND SHOULD PROVIDE A DESIRABLE MINIMUM OF 200 FEET CLEARANCE TO EXISTING SIGNS THAT WILL REMAIN IN PLACE.

ALL SIGNS ARE 48"x48" UNLESS OTHERWISE NOTED. IF NECESSARY DUE TO SPACE CONSTRAINTS, 36"x36" SIGNS MAY BE USED INSTEAD OF 48"x48" SIGNS.

SIGNS THAT WILL BE IN PLACE LESS THAN 7 CONTINUOUS DAYS AND NIGHTS MAY BE MOUNTED ON PORTABLE SUPPORTS.

IF A "STOP" SIGN MUST BE REMOVED FOR A WORK OPERATION, A TEMPORARY "STOP" SIGN SHALL BE PLACED PRIOR TO THE SIGN REMOVAL, OR A FLAGGER SHALL BE PROVIDED UNTIL THE SIGN IS RE-ESTABLISHED.

* THE THIRD W20-1 SIGN IS REQUIRED ONLY IF THERE IS AN INTERSECTION BETWEEN THE "ROAD WORK 500 FT" SIGN AND THE WORK ZONE. ADJUST THE PLACEMENT OF THIS SIGN BASED ON INTERSECTION LOCATION AND OTHER FIELD CONDITIONS.

LEGEND

- SIGN ON PERMANENT SUPPORT
- DIRECTION OF TRAFFIC
- WORK AREA

TRAFFIC CONTROL, ADVANCE WARNING SIGNS 40 M.P.H. OR LESS TWO-WAY UNDIVIDED ROAD OPEN TO TRAFFIC
STATE OF WISCONSIN DEPARTMENT OF TRANSPORTATION
APPROVED DATE STATE TRAFFIC ENGINEER DESIGN FHWA

S.D.D. 15 C 5-3

S.D.D. 15 C 5-3

GENERAL NOTES

DETAILS OF INSTALLATION, MATERIALS AND WORKMANSHIP NOT SHOWN ON THIS DRAWING SHALL CONFORM TO THE PERTINENT REQUIREMENTS OF THE STANDARD SPECIFICATIONS AND APPLICABLE SPECIAL PROVISIONS.

ALL LETTERS, ARROWS AND SYMBOLS SHALL BE IN CONFORMANCE WITH REQUIREMENTS INCLUDED IN "STANDARD ALPHABETS FOR HIGHWAY SIGNS AND PAVEMENT MARKING" BOOK BY THE FEDERAL HIGHWAY ADMINISTRATION. ALL LETTERS, ARROWS AND SYMBOLS SHALL BE WHITE AND REFLECTORIZED. SMALL DIFFERENCES IN DIMENSIONS WITHIN THE TOLERANCES OF THAT BOOK ARE ACCEPTABLE.

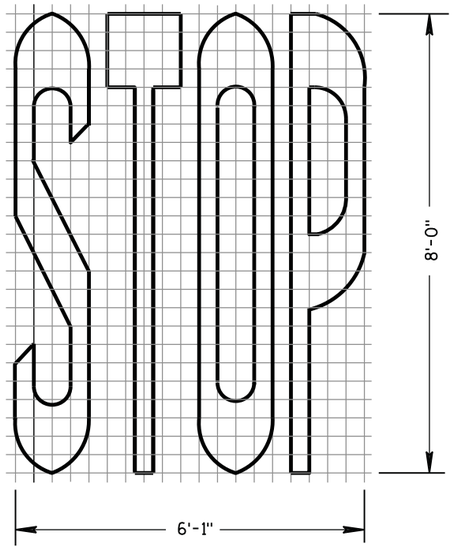

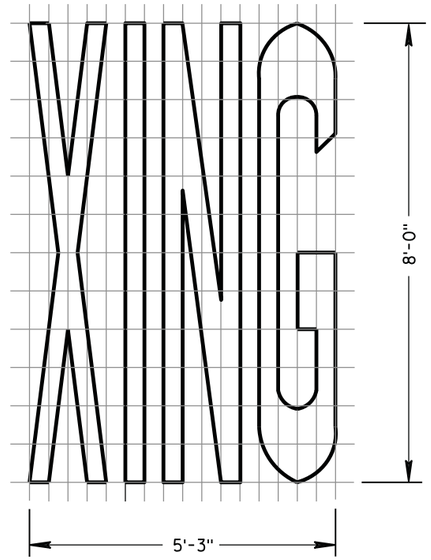

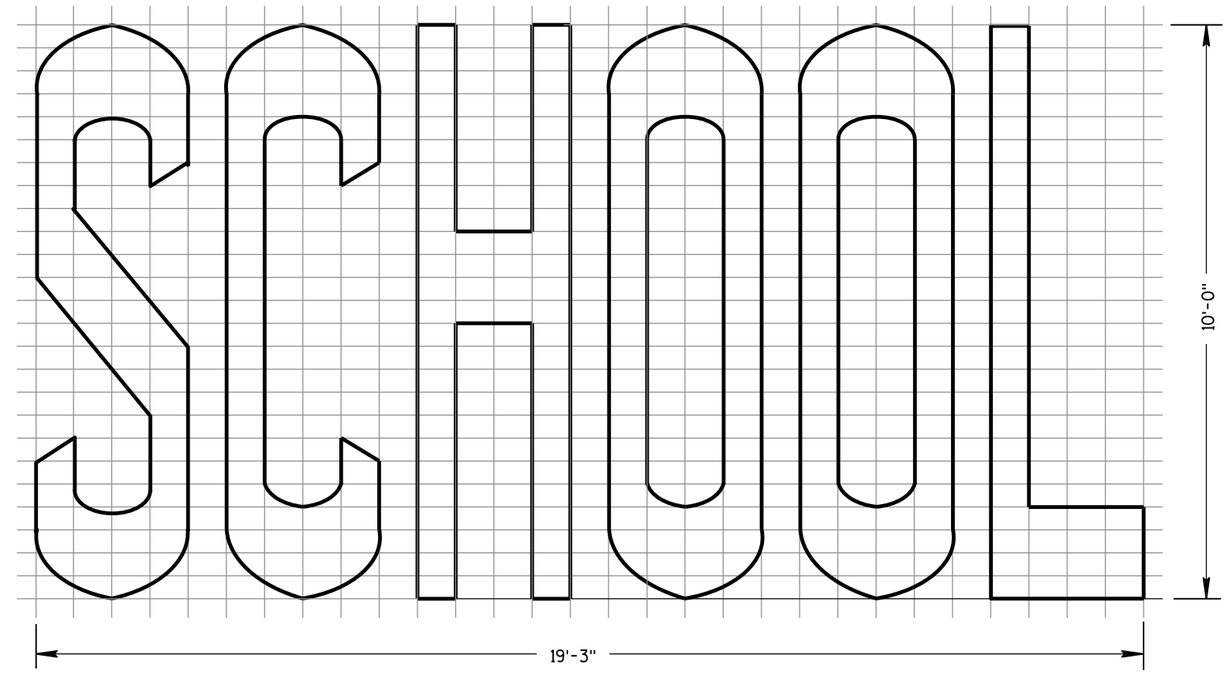

TWO-LANE

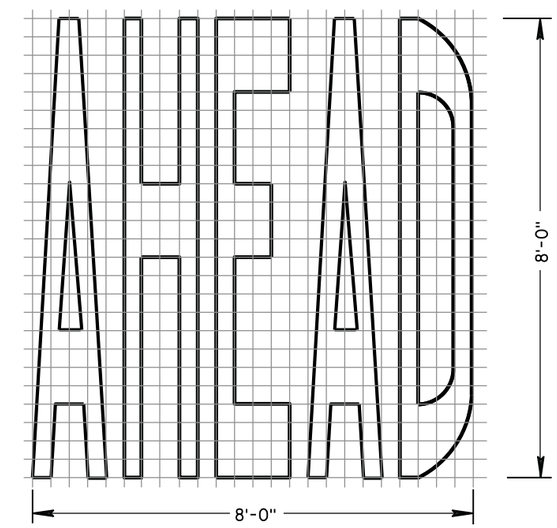

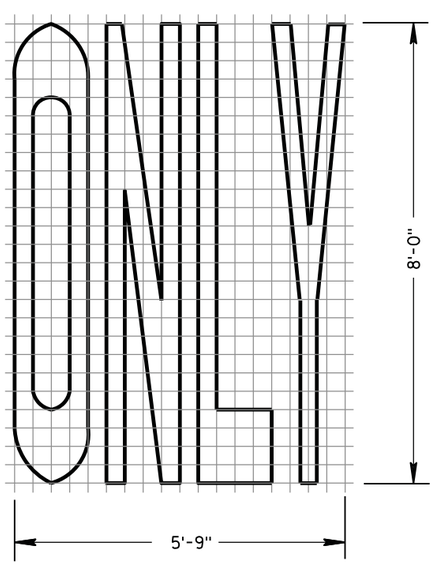

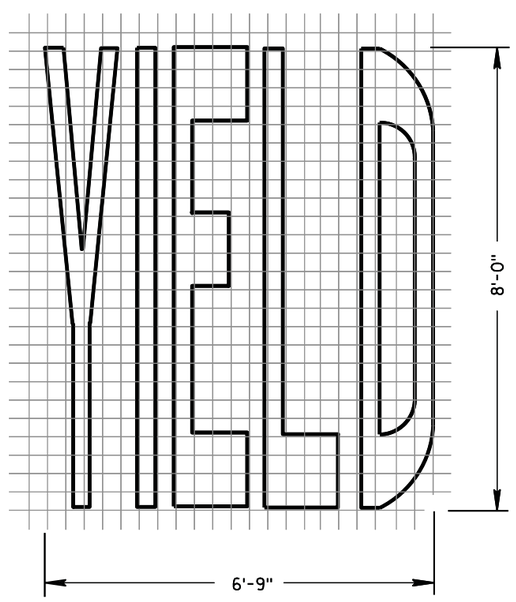

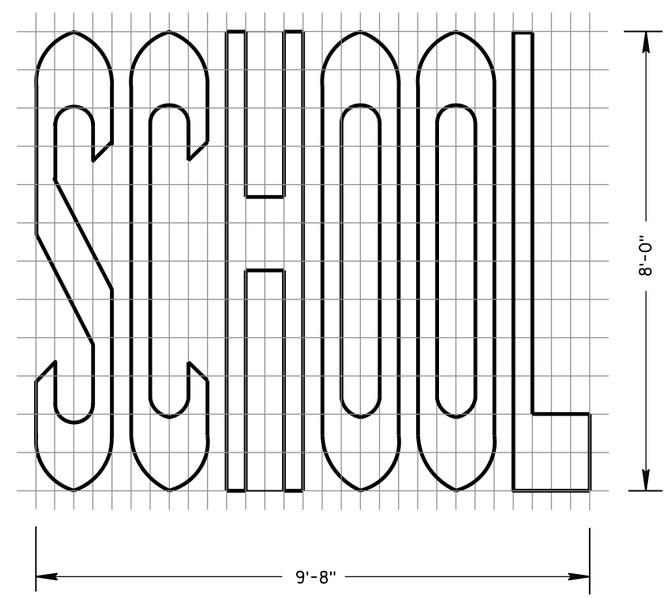

SINGLE-LANE

6

6

S.D.D. 15 C 7-12b

S.D.D. 15 C 7-12b

PAVEMENT MARKING WORDS

STATE OF WISCONSIN
DEPARTMENT OF TRANSPORTATION

APPROVED

7-1-11 — DATE

/S/ Thomas N. Notbohm — STATE TRAFFIC ENGINEER OF DESIGN

FHWA

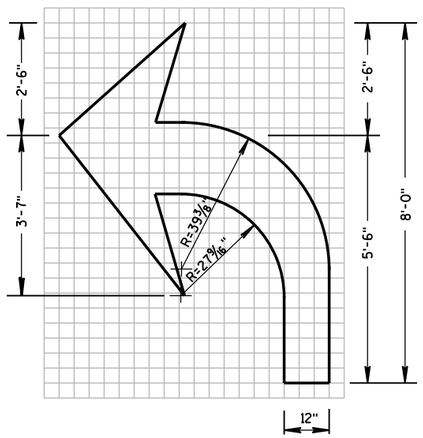

TYPE 2

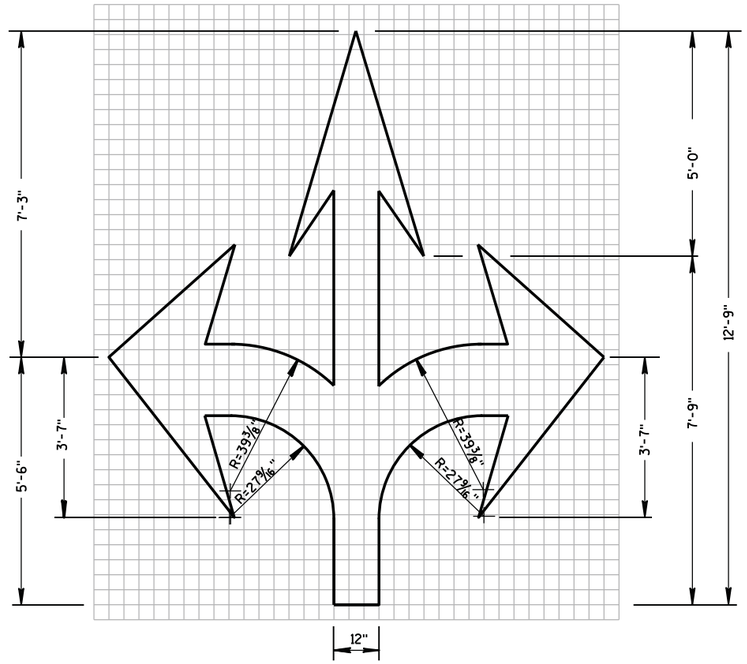

TYPE 6

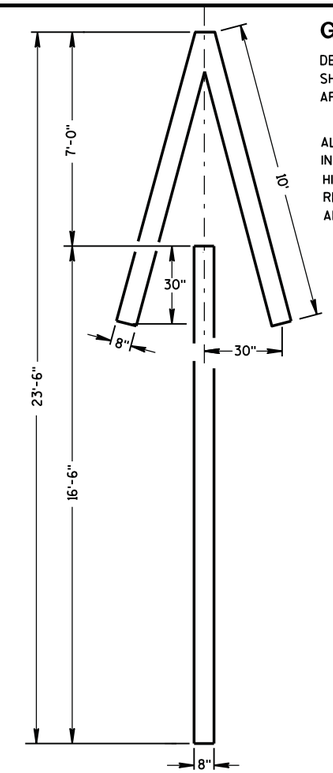

TYPE 4

GENERAL NOTES

DETAILS OF INSTALLATION, MATERIALS AND WORKMANSHIP NOT SHOWN ON THIS DRAWING SHALL CONFORM TO THE PERTINENT REQUIREMENTS OF THE STANDARD SPECIFICATIONS AND APPLICABLE SPECIAL PROVISIONS.

ALL LETTERS, ARROWS AND SYMBOLS SHALL BE IN CONFORMANCE WITH REQUIREMENTS INCLUDED IN "STANDARD ALPHABETS FOR HIGHWAY SIGNS AND PAVEMENT MARKING" BOOK BY THE FEDERAL HIGHWAY ADMINISTRATION. ALL LETTERS, ARROWS AND SYMBOLS SHALL BE WHITE AND REFLECTORIZED. SMALL DIFFERENCES IN DIMENSIONS WITHIN THE TOLERANCES OF THAT BOOK ARE ACCEPTABLE.

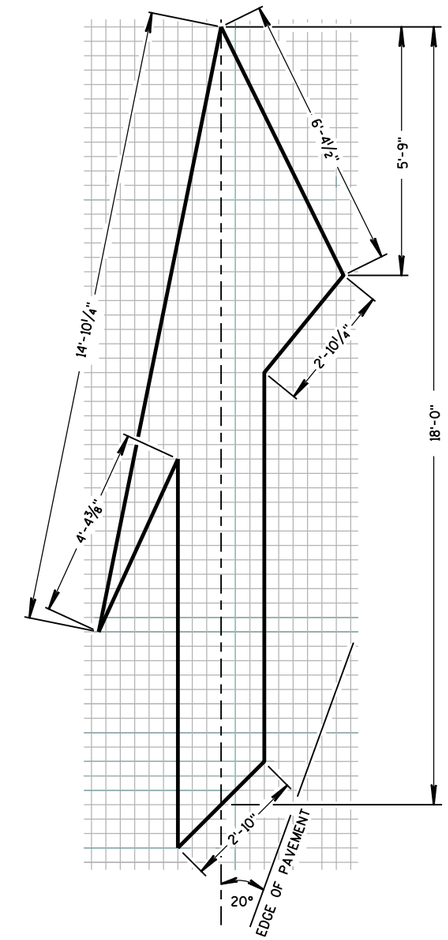

TYPE 5 LANE DROP ARROW

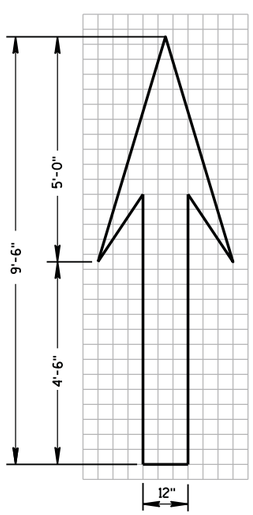

TYPE 1

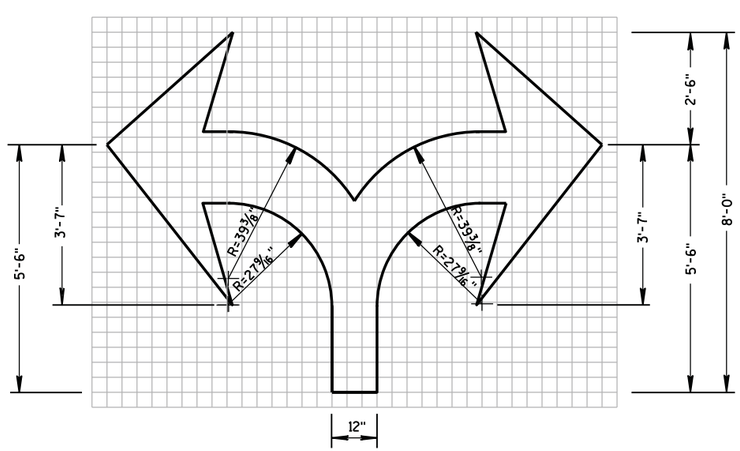

TYPE 7

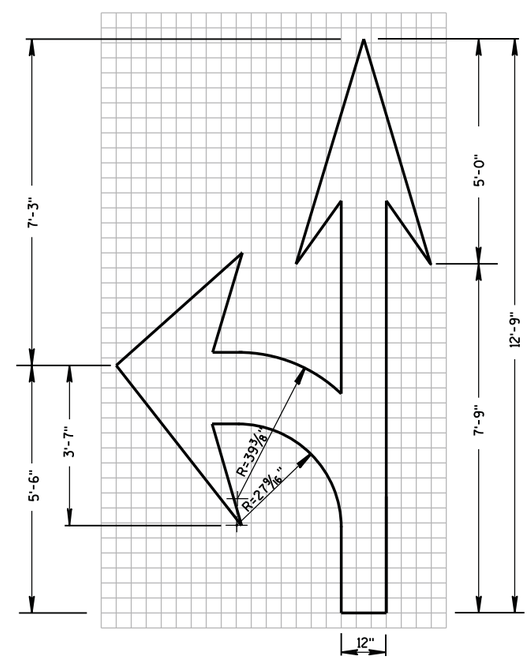

TYPE 3

PAVEMENT MARKING ARROWS

STATE OF WISCONSIN
DEPARTMENT OF TRANSPORTATION

APPROVED
7-1-2011 — DATE
/S/ Thomas N. Notbohm — STATE TRAFFIC ENGINEER DTSD DESIGN
FHWA

6

S.D.D. 15 C 7-12c

6

S.D.D. 15 C 7-12c

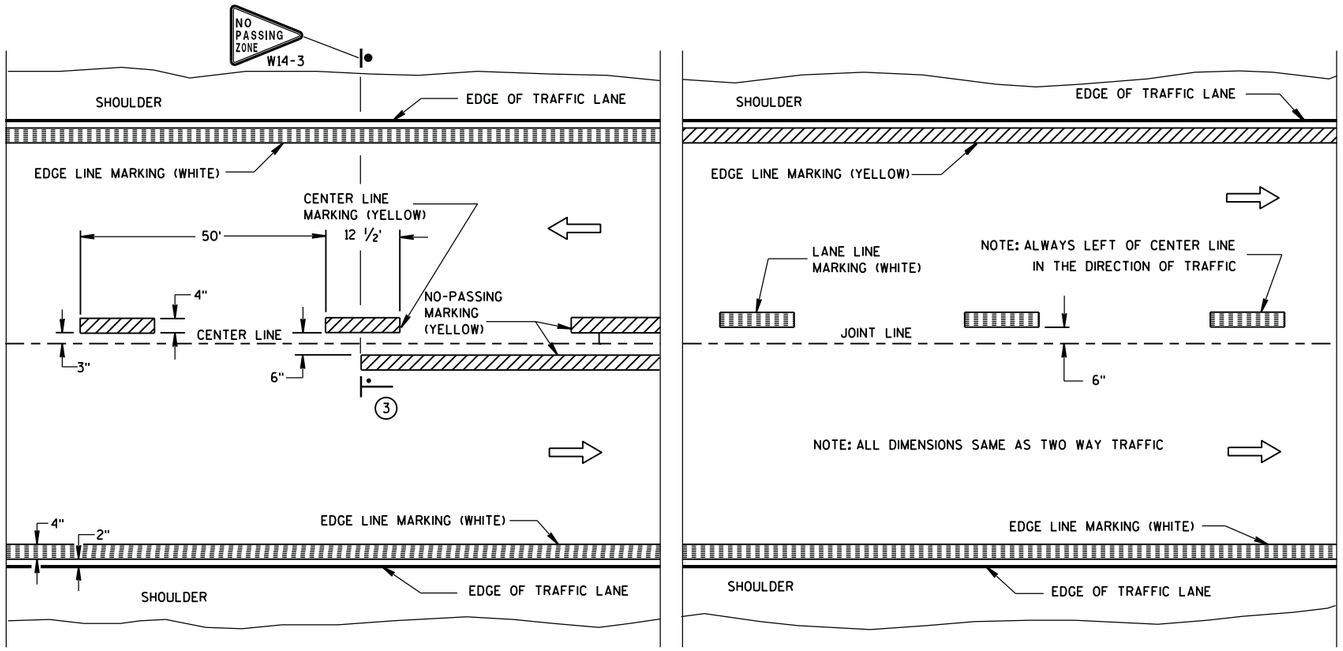

TWO WAY TRAFFIC

ONE WAY TRAFFIC

PERMANENT PAVEMENT MARKING

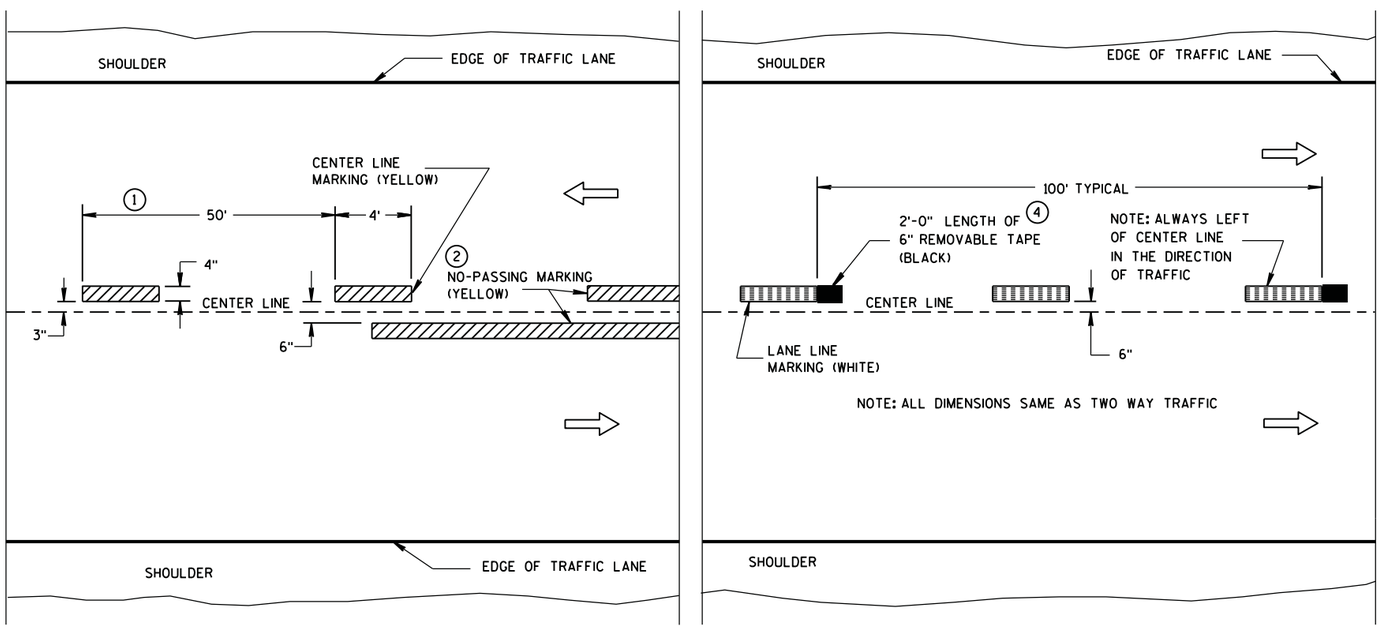

TWO WAY TRAFFIC

ONE WAY TRAFFIC

TEMPORARY (INTERMEDIATE) PAVEMENT MARKING

(SHOWS CYCLE FOR TEMPORARY CENTER LINE OR TEMPORARY LANE LINE MARKING)

GENERAL NOTES

DETAILS OF CONSTRUCTION NOT SHOWN ON THIS DRAWING SHALL CONFORM TO STANDARD SPECIFICATIONS AND SPECIAL PROVISIONS.

1. HALF CYCLE LENGTHS (25'±) WITH 2' MINIMUM STRIPE LENGTHS SHALL BE PROVIDED ON ROADWAYS (INCLUDING TEMPORARY TRAVELED WAYS) WITH REVERSE CURVATURE, CURVATURE OF OVER 5 DEGREES OR WHEN DIRECTED BY THE ENGINEER TO MARK UNUSUAL ALIGNMENT OF THE TRAVELED WAY.
2. NO PASSING ZONE TEMPORARY PAVEMENT MARKING IS REQUIRED TO BE PLACED, WHERE APPROPRIATE, ALONG WITH CENTERLINE TEMPORARY PAVEMENT MARKING WHEN A SAME DAY PERMANENT PAVEMENT MARKING ITEM IS INCLUDED IN THE CONTRACT.
3. NO PASSING ZONE MARKINGS ARE PLACED ACCORDING TO "T" MARKINGS. IF EXISTING NO PASSING ZONE W14-3 SIGNS ARE BEYOND 50 FEET IN EITHER DIRECTION, THE SIGNS SHALL BE MOVED TO THE "T" MARKINGS.
4. CONCRETE ONLY.

NOTE

ARROW SYMBOL (⇨) SHOWS DIRECTION OF TRAVEL

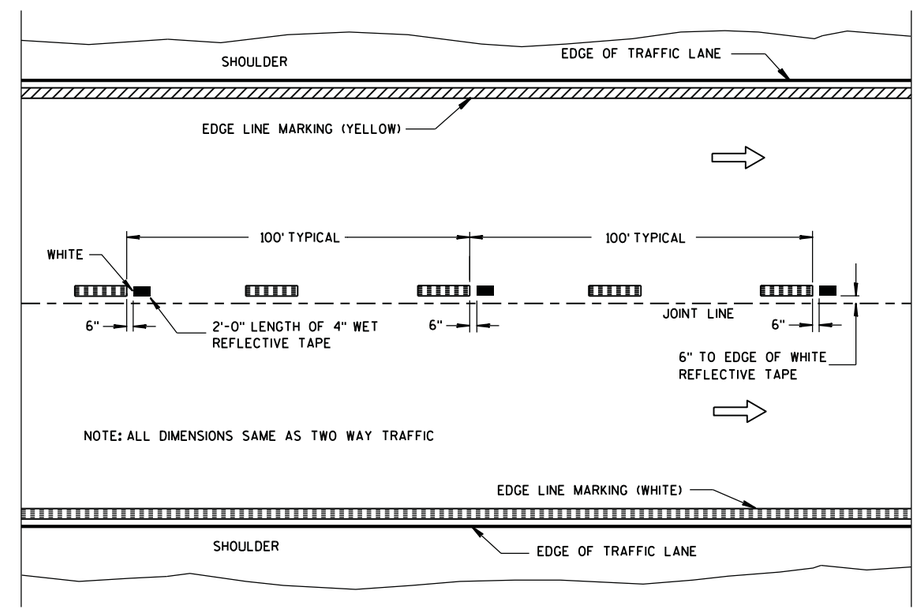

WET REFLECTIVE TAPE SUPPLEMENT TO SPRAYED OR NON WET REFLECTIVE TAPE LANE LINE

LEGEND

"T" MARKING

POST MOUNTED SIGN

PAVEMENT MARKING (MAINLINE)

STATE OF WISCONSIN
DEPARTMENT OF TRANSPORTATION

APPROVED

5-13-2013 — DATE

/S/ Travis Feltes — STATE TRAFFIC ENGINEER

FHWA

6

S.D.D. 15 C 8-16a

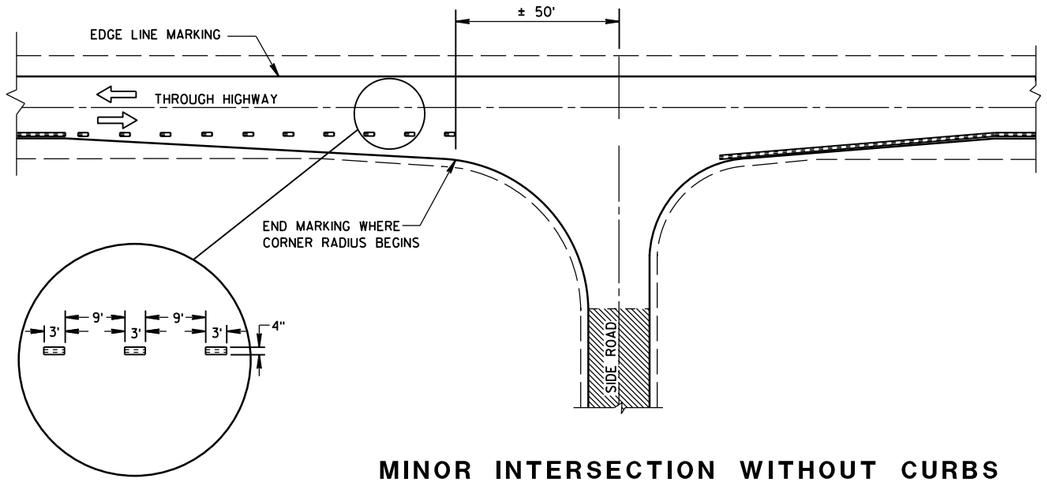

MINOR INTERSECTION WITHOUT CURBS

GENERAL NOTES

EDGE LINES SHALL BE OMITTED THROUGH INTERSECTIONS. EDGE LINES SHALL BE CONTINUED THROUGH DRIVEWAYS.

(1) WHEN DISTANCE "A" IS LESS THAN 250 FEET, OMIT LANE LINE.

(2) WHEN DISTANCE "B" IS LESS THAN 100 FEET, OMIT CHANNELIZING LANE LINE.

(3) ALTERNATIVE MARKING SHALL BE PROVIDED WHEN SPECIFIED IN THE CONTRACT. TYPICAL SITUATIONS WHERE THIS MARKING MAY BE REQUIRED ARE WHERE THE INTERSECTION IS ON A SHARP HORIZONTAL CURVE OR CREST VERTICAL CURVE IN AN UNLIGHTED AREA SUCH THAT THE EDGE LINE MAY BE MISLEADING TO THE MOTORIST OR DISAPPEAR FROM SIGHT.

(4) THE EDGE LINE IN THE TAPER AREAS OF THE BYPASS LANE AND THE BYPASS LANE SHALL BE LOCATED 1-FOOT FROM EDGE OF PAVEMENT TO THE OUTSIDE EDGE OF EDGE LINE.

(5) BARRIER LINE ENDS AT SIDE ROAD PAVEMENT/SURFACE EDGE EXTENSION.

(6) BARRIER LINE STARTS 500 FEET PRIOR TO THE BYPASS TAPER.

(7) IF THE DISTANCE BETWEEN 2 SUCCESSIVE NO-PASSING ZONES IS LESS THAN THE MINIMUM DISTANCE BETWEEN ZONES, CONNECT THE 2 ZONES.

(8) 3' LINE 9' GAP, EXCEPT RETRACE THE EXISTING LINE - GAP PATTERN WHERE EXISTING MARKINGS ARE IN PLACE.

ARROW SYMBOL (⇨) SHOWS DIRECTION OF TRAVEL

(7)

POSTED SPEED (MPH)	MINIMUM DISTANCE BETWEEN ZONES (FEET)
25 - 30	528
35 - 40	528
45 - 50	686
55	792

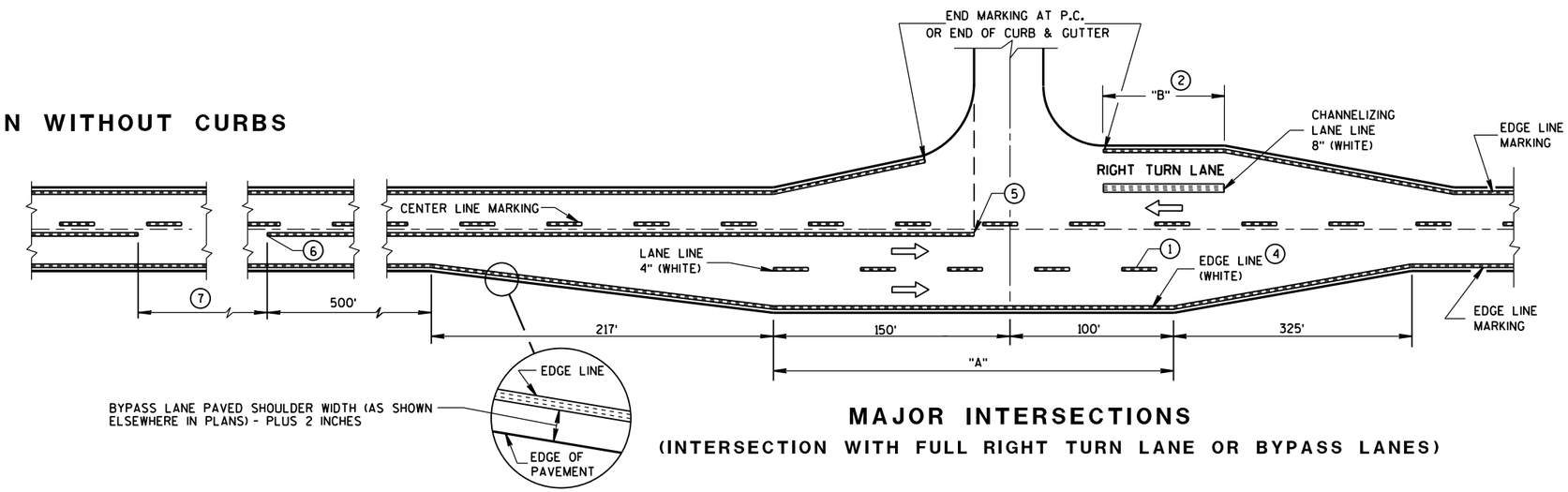

MAJOR INTERSECTIONS

(INTERSECTION WITH FULL RIGHT TURN LANE OR BYPASS LANES)

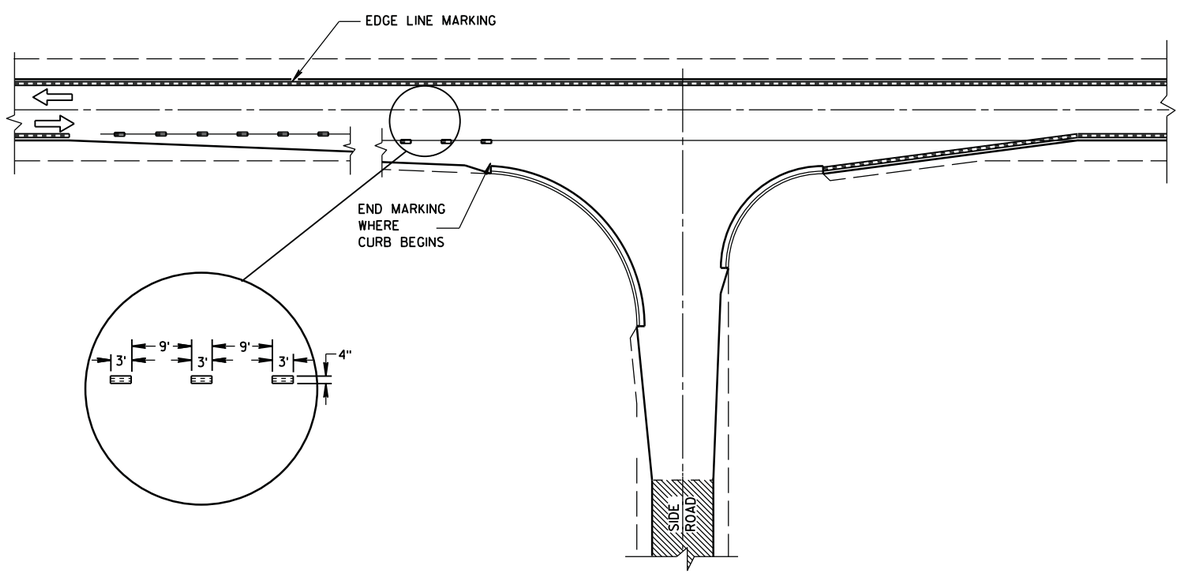

MINOR INTERSECTION WITH CURBS

(TYPICAL MARKING)

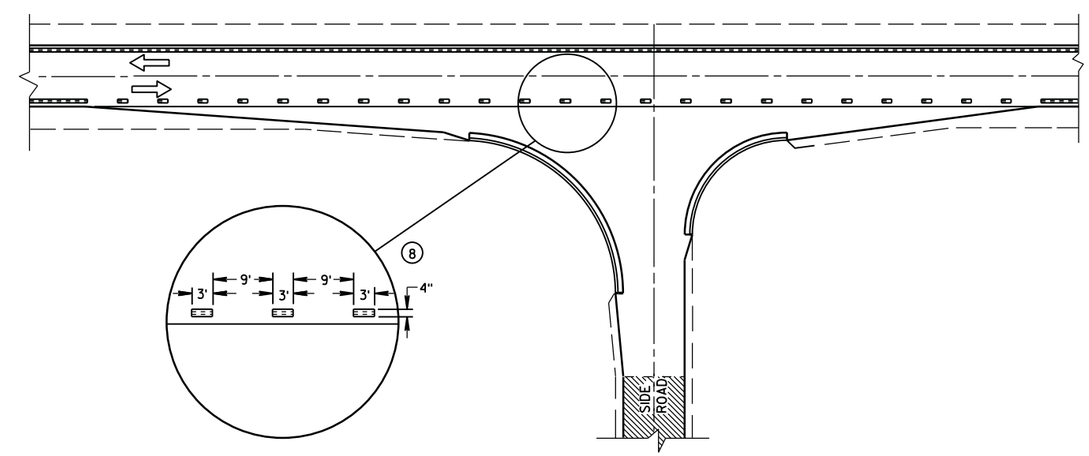

MINOR INTERSECTION WITH CURBS

(3) (FOR SPECIAL CONDITIONS AS SPECIFIED)

PAVEMENT MARKING (INTERSECTIONS)

STATE OF WISCONSIN
DEPARTMENT OF TRANSPORTATION

6

S.D.D. 15 C 8-16b

15C8 sheet e: Pavement Marking (Left Turn Lane)

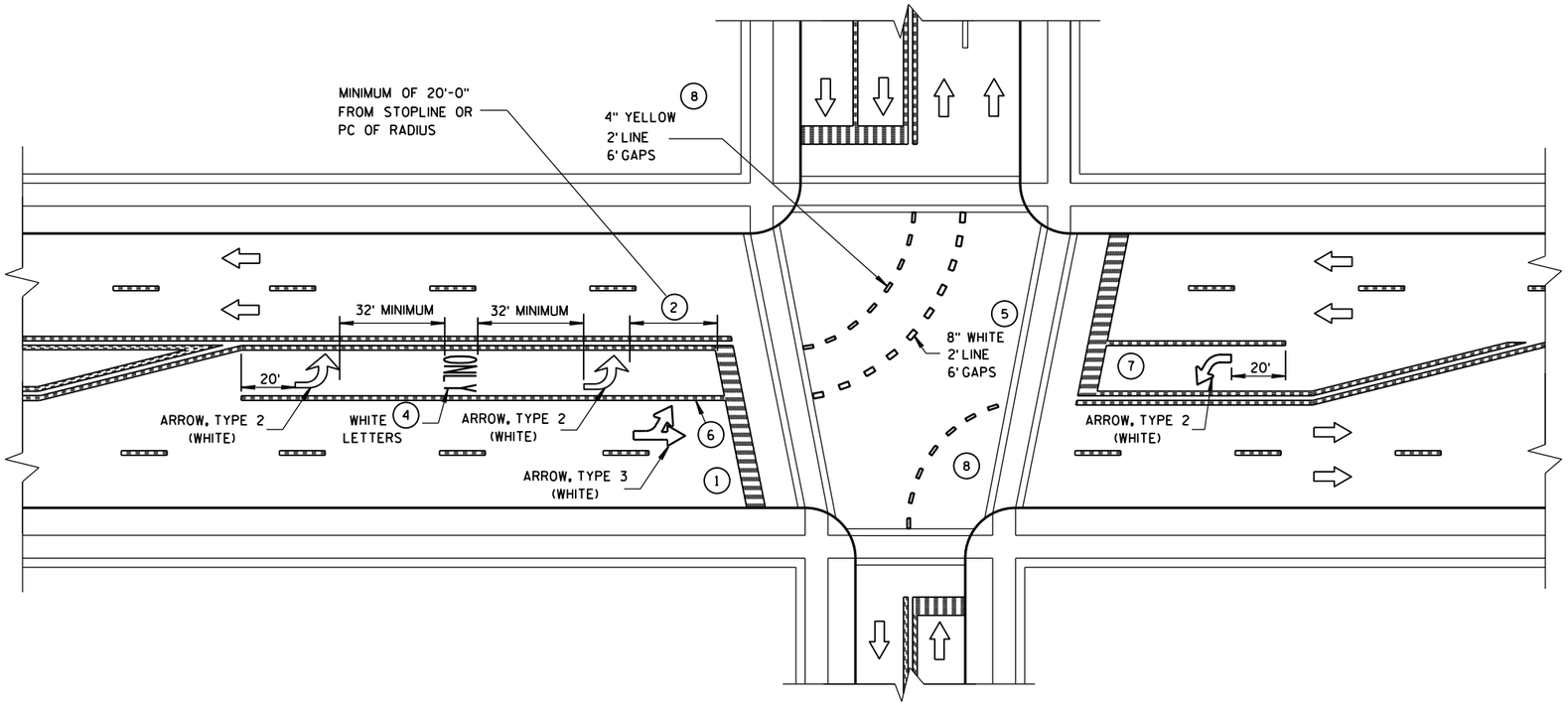

GENERAL NOTES

1. STOP BAR IS REQUIRED ONLY WHEN SPECIFIED IN THE CONTRACT.
2. DISTANCE MAY BE ADJUSTED TO ACCOMODATE SHORT LEFT TURN LANES. AS APPROVED BY THE ENGINEER.
3. A SET OF ARROWS IS REQUIRED EVERY 400 FEET OR NEAR INTERSECTIONS OR DRIVEWAYS WITH TURNING TRAFFIC.
4. ADD EXTRA SETS OF ONE ARROW AND ONE ONLY PER 160 FEET OR WHEN ON A CURVE.
5. 8" WHITE WITH 2' LINE 6' GAPS FOR DUAL TURN LANE.
6. 8" WHITE
7. ADD SECOND ARROW WHEN TURN BAY IS GREATER THAN OR EQUAL TO 108 FEET.
8. REQUIRED ONLY WHEN SPECIFIED IN THE CONTRACT.

NOTE:
ARROW SYMBOL (⇨)
SHOWS DIRECTION OF TRAVEL

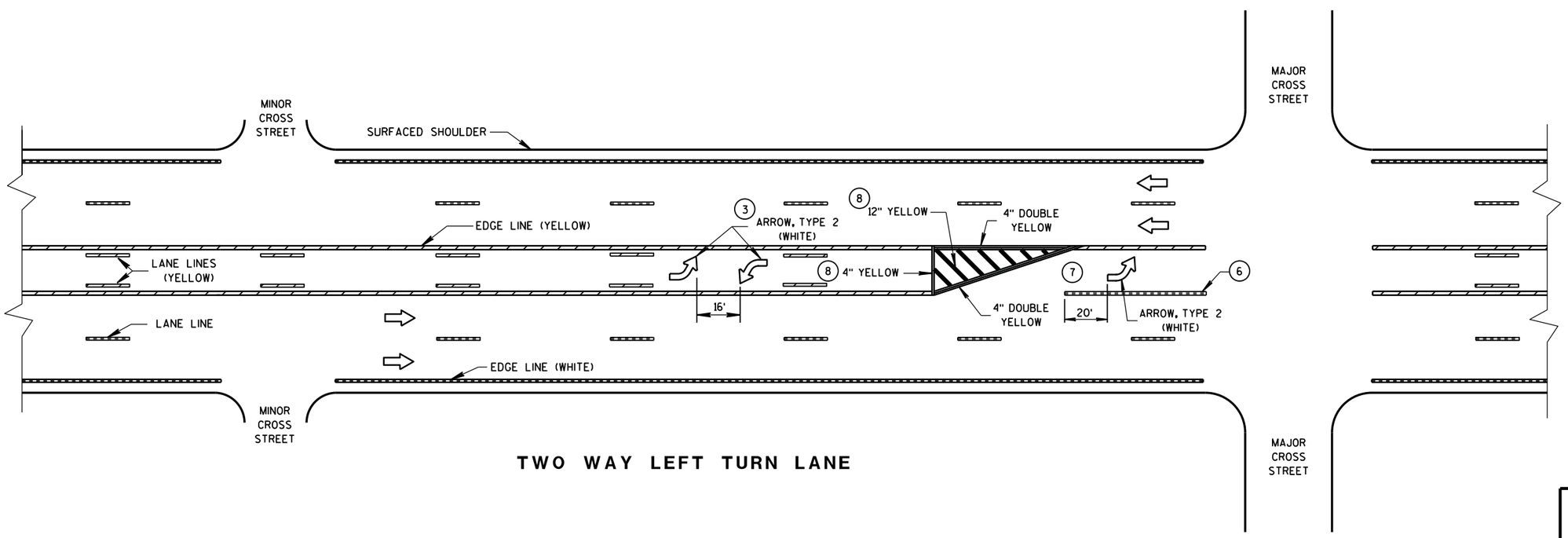

TWO WAY LEFT TURN LANE

PAVEMENT MARKING
(LEFT TURN LANE)

STATE OF WISCONSIN
DEPARTMENT OF TRANSPORTATION

6

S.D.D. 15 C 8-16e

6

S.D.D. 15 C 8-16e

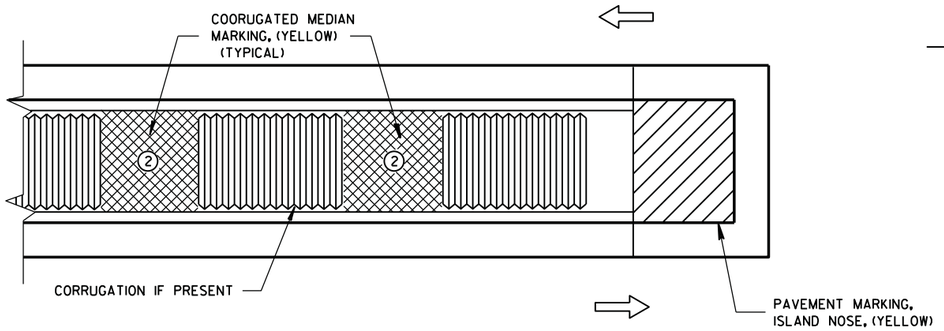

MEDIAN ISLAND WITH SQUARE BLUNT NOSE

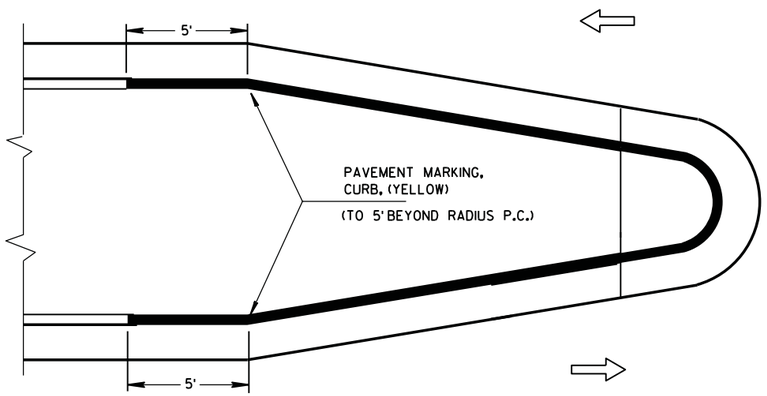

MEDIAN ISLAND WITH ROUND BLUNT NOSE

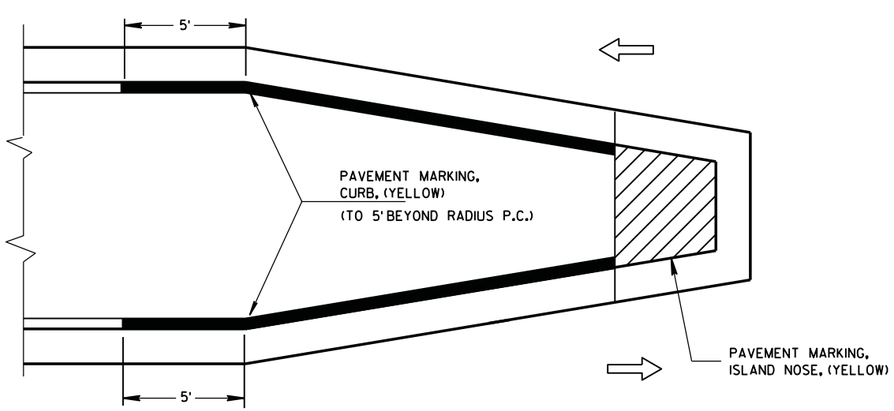

MEDIAN ISLAND WITH SLOPED NOSE

TYPICAL PLACEMENT OF PAVEMENT MARKING ON MEDIAN ISLANDS

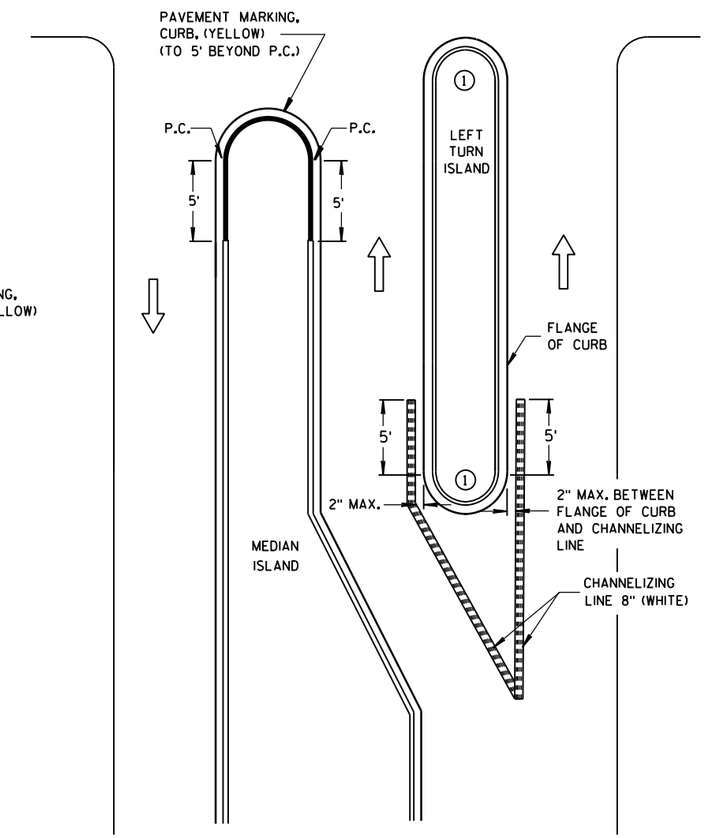

LEFT TURN & MEDIAN ISLAND

GENERAL NOTES

1. DO NOT MARK CURB NOSES THAT SEPARATE LANES OF TRAFFIC TRAVELING IN THE SAME DIRECTION.

2. WHEN CONCRETE CORRUGATED MEDIAN IS CONSTRUCTED TO SEPARATE TRAFFIC OPERATING IN THE OPPOSING DIRECTION YELLOW PAVEMENT MARKING SHALL BE APPLIED TO THE FLAT PORTION OF THE CONCRETE CORRUGATED MEDIAN. THE ITEM OF PAVEMENT MARKING, CONCRETE CORRUGATED MEDIAN, WILL BE MEASURED IN PLACE AND AND ACCEPTED IN ACCORDANCE WITH THE CONTRACT AND PAID FOR AT THE CONTRACT UNIT PRICE PER SQUARE FOOT.

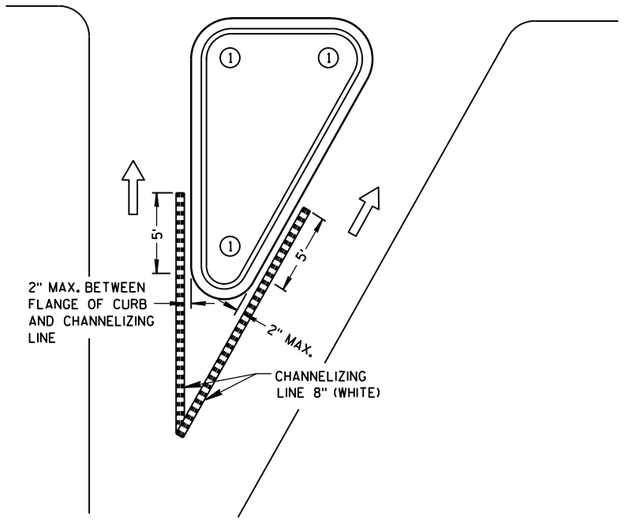

RIGHT TURN ISLAND

LEGEND

- ISLAND NOSE MARKING
- CURB MARKING
- CORRUGATED MEDIAN MARKING
- DIRECTION OF TRAVEL

PAVEMENT MARKING (ISLANDS)

STATE OF WISCONSIN
DEPARTMENT OF TRANSPORTATION

6

6

S.D.D. 15 C 8-16f

S.D.D. 15 C 8-16f

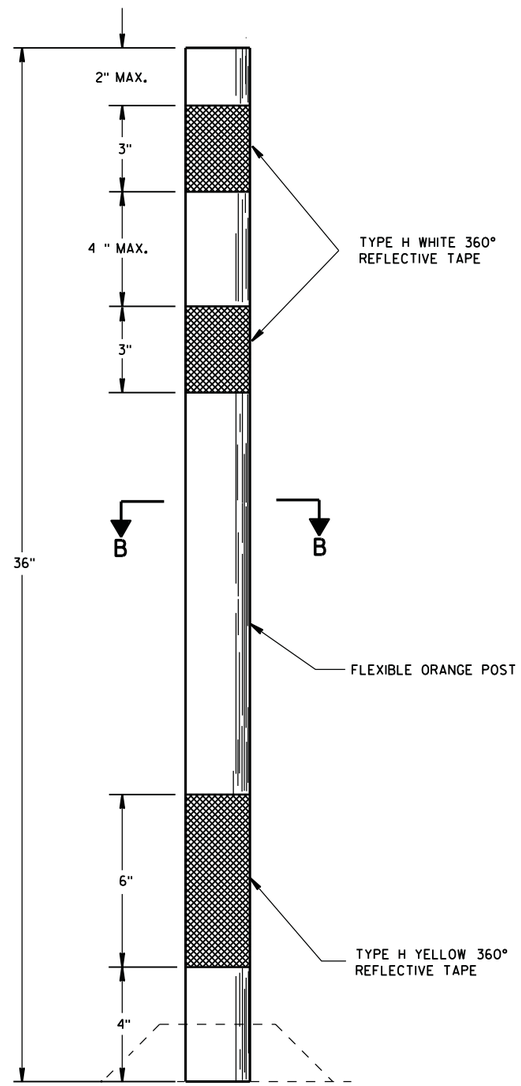

FLEXIBLE TUBULAR MARKER POST

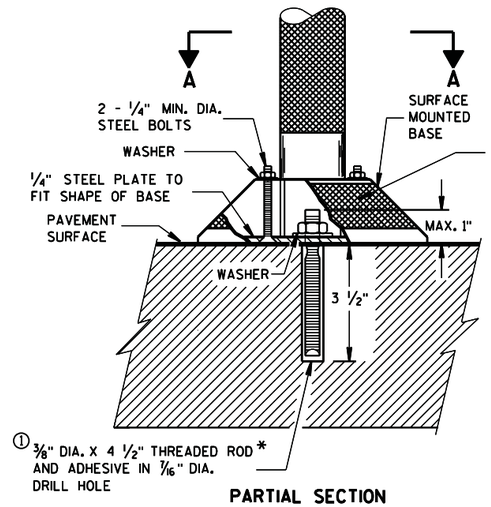

PARTIAL SECTION TO SHOW BOLTS

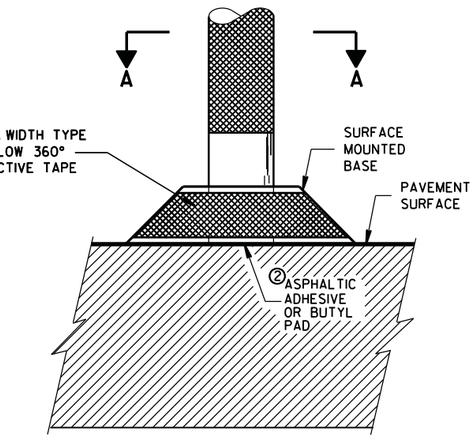

POST BASES ON NEW OR EXISTING PAVEMENT

GENERAL NOTES

DETAILS OF CONSTRUCTION NOT SHOWN ON THIS DRAWING SHALL CONFORM TO THE PERTINENT REQUIREMENTS OF THE STANDARD SPECIFICATIONS AND APPLICABLE SPECIAL PROVISIONS.

SURFACE MOUNTED BASES SHALL BE FURNISHED IN ACCORDANCE WITH MANUFACTURERS RECOMMENDATIONS TO BE COMPATIBLE WITH FLEXIBLE TUBULAR MARKER POSTS TO A SIZE AND SHAPE THAT WILL PROVIDE A STABLE POST FOUNDATION WHEN SECURED TO THE PAVEMENT.

① THREADED ROD SHALL BE MACHINED DOWN TO 0.280 INCH DIA. 1 1/4 INCHES FROM THE TOP.

② THE ASPHALTIC ADHESIVE OR BUTYL PAD FURNISHED SHALL BE IN ACCORDANCE WITH MANUFACTURERS RECOMMENDATIONS.

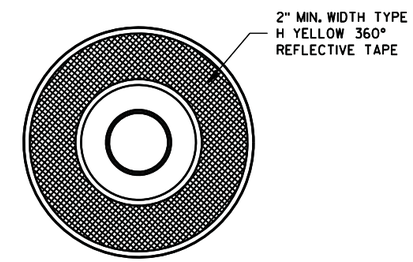

SECTION A-A

SURFACE MOUNTED BASE

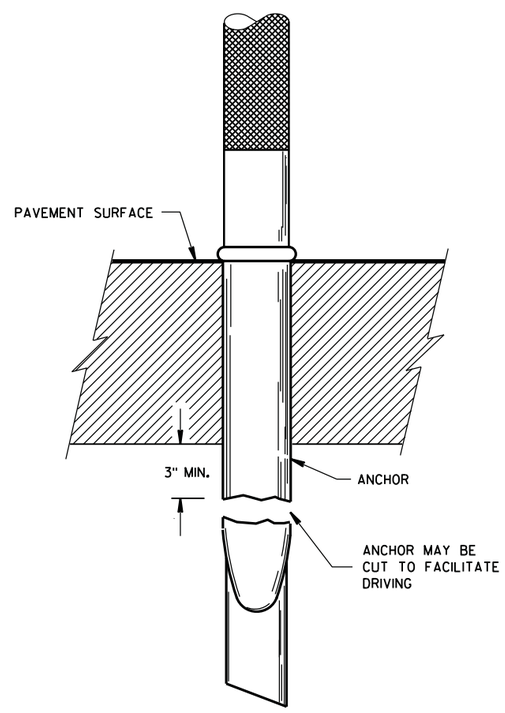

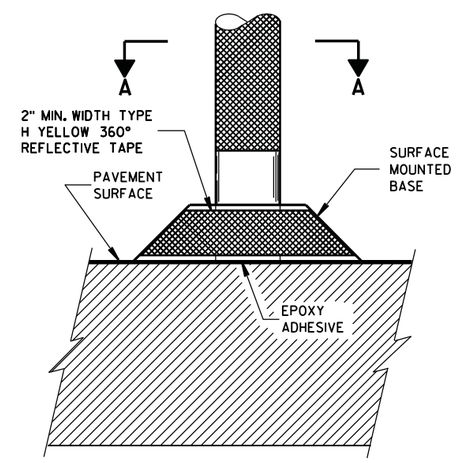

POST ANCHOR AND BASE ON PAVEMENT WHICH WILL BE REMOVED

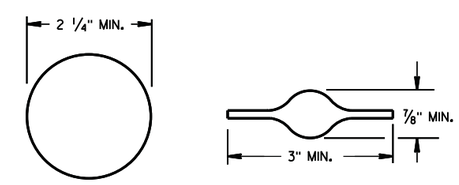

SECTION B-B

ALTERNATIVE SHAPES

FLEXIBLE TUBULAR MARKER POST, ANCHOR & BASES

STATE OF WISCONSIN
DEPARTMENT OF TRANSPORTATION

APPROVED
2-17-1994 — DATE
/S/ Chester J. Spang — DIRECTOR, OFFICE OF TRAFFIC
FHWA

6

6

S.D.D. 15 C 11-5

S.D.D. 15 C 11-5

15C12: Traffic Control for Lane Closure (Suitable for Moving Operations)

LEGEND

- SIGN ON PORTABLE OR PERMANENT SUPPORT
- DIRECTION OF TRAFFIC
- WORK AREA
- FLAGGER, EQUIPPED WITH STOP/SLOW PADDLE FASTENED ON SUPPORT STAFF

SIGN SPACING TABLE

SPEED LIMIT	SIGN SPACING A,B,C
25-35 MPH	200'
35-40 MPH	350'
45-55 MPH	500'

USE OF THE "BE PREPARED TO STOP" SIGN IS OPTIONAL. WHEN USED, THIS SIGN SHALL BE LOCATED BETWEEN THE W20-7a AND W20-4 SIGNS. A 500' TYPICAL SPACING SHALL BE PROVIDED BETWEEN THE SIGNS.

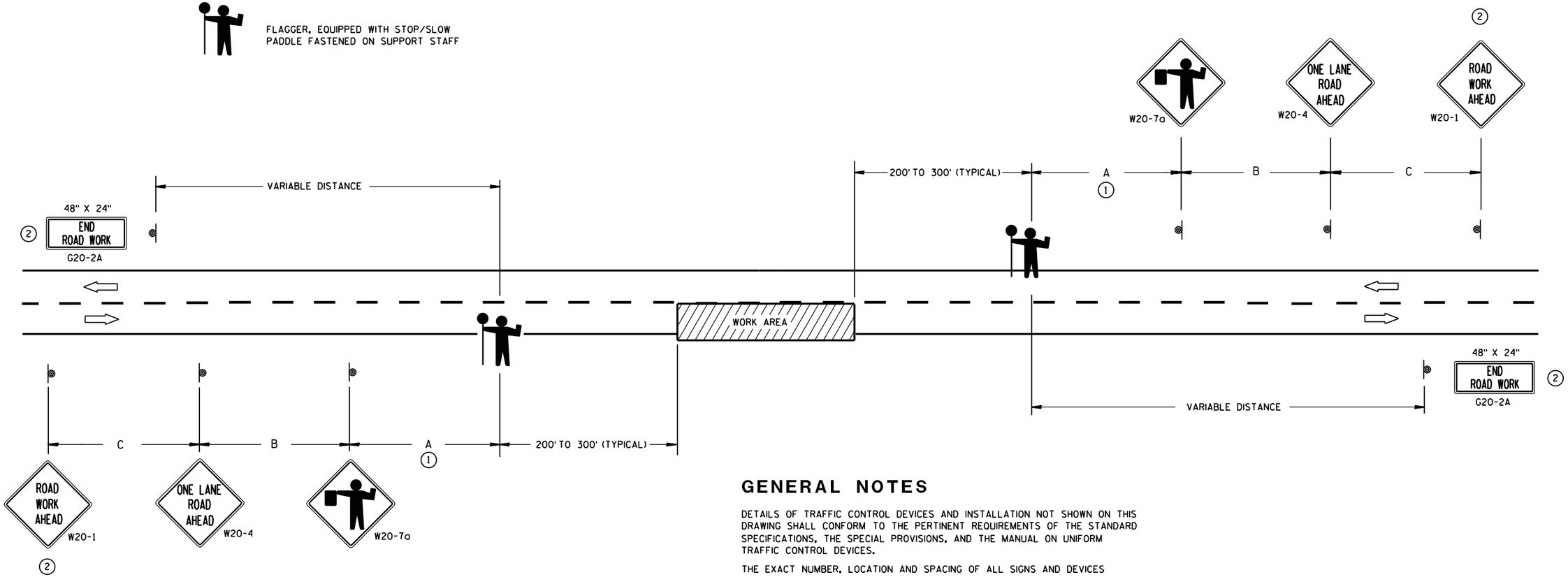

(1) FOR A MOVING WORK OPERATION, SIGNING FOR BOTH DIRECTIONS SHALL BE REESTABLISHED (AS SIMULTANEOUSLY AS PRACTICAL) AT APPROXIMATELY 3500 FOOT INTERVALS IN THE MOVING WORK OPERATION OR AS APPROVED BY THE ENGINEER.

(2) SIGN NOT REQUIRED IF FLAGGING OPERATION OCCURS WITHIN A SIGNED ROAD WORK ZONE AREA.

GENERAL NOTES

DETAILS OF TRAFFIC CONTROL DEVICES AND INSTALLATION NOT SHOWN ON THIS DRAWING SHALL CONFORM TO THE PERTINENT REQUIREMENTS OF THE STANDARD SPECIFICATIONS, THE SPECIAL PROVISIONS, AND THE MANUAL ON UNIFORM TRAFFIC CONTROL DEVICES.

THE EXACT NUMBER, LOCATION AND SPACING OF ALL SIGNS AND DEVICES (AND THE LOCATION OF ALL FLAGGERS) SHALL BE ADJUSTED TO FIT FIELD CONDITIONS AS APPROVED BY THE ENGINEER.

THE FIRST ADVANCE WARNING SIGN SHOULD TYPICALLY BE LOCATED IN ADVANCE OF THE ANTICIPATED TRAFFIC BACKUP OR QUEUE.

WHEN A SIDE ROAD OR RAMP INTERSECTS THE FACILITY ON WHICH THE WORK IS BEING PERFORMED, ADDITIONAL TRAFFIC CONTROLS SHALL BE PROVIDED AS SPECIFIED IN THE PLANS AND/OR THE SPECIAL PROVISIONS OR AS APPROVED BY THE ENGINEER.

FLAGGERS SHALL BE IN SIGHT OF EACH OTHER OR IN DIRECT COMMUNICATION AT ALL TIMES. THEY SHALL BE EQUIPPED WITH STOP/SLOW PADDLES FASTENED ON SUPPORT STAFFS. WHEN THE FLAGGING OPERATION IS NOT IN EFFECT, COVER OR REMOVE ALL TEMPORARY TRAFFIC CONTROL SIGNS.

ALL SIGNS ARE 48" X 48" UNLESS OTHERWISE NOTED.

TRAFFIC CONTROL FOR LANE CLOSURE (SUITABLE FOR MOVING OPERATIONS)

STATE OF WISCONSIN
DEPARTMENT OF TRANSPORTATION

APPROVED
8/2013 — DATE
/S/ Travis Feltes — STATE TRAFFIC ENGINEER
FHWA

6

S.D.D. 15 C 12-4

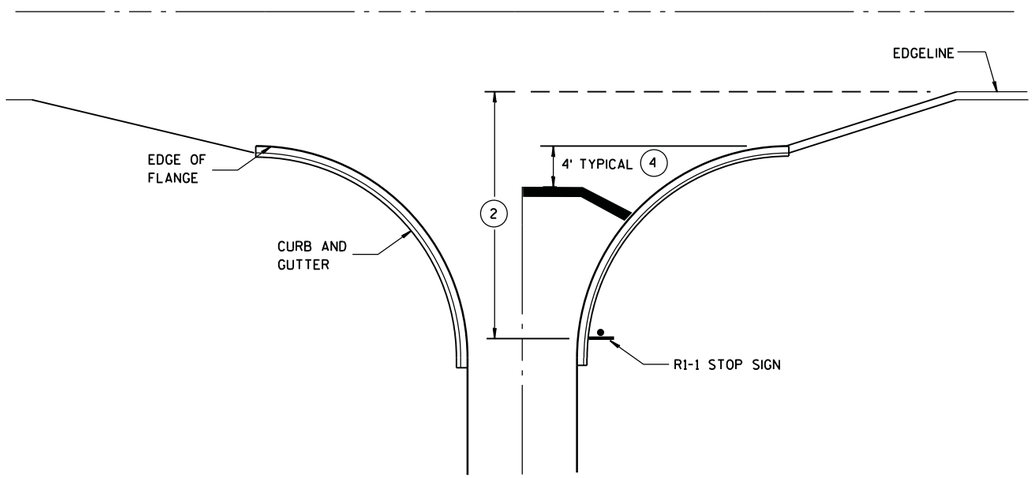

TYPICAL STOP LINE PAVEMENT MARKING WITH CURB AND GUTTER

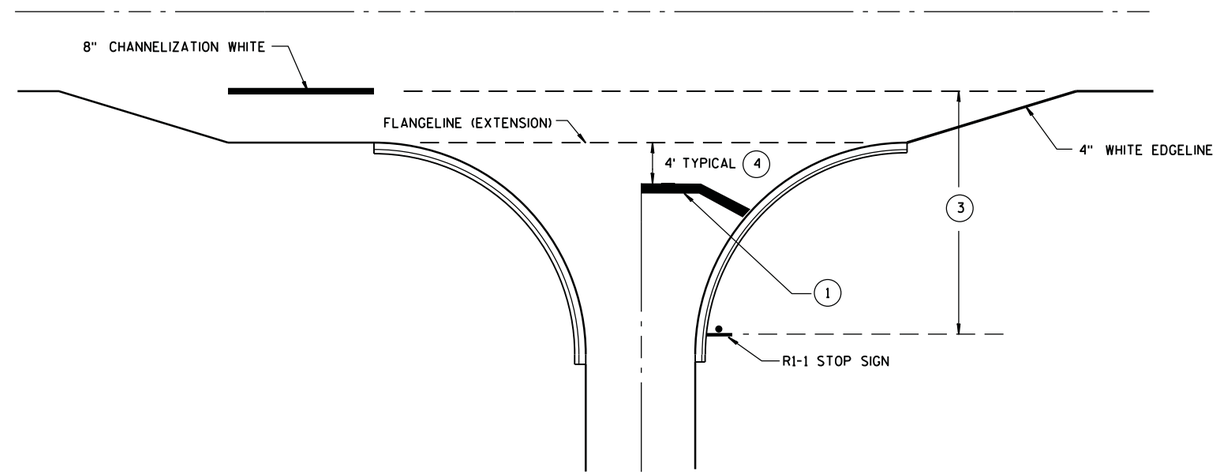

TYPICAL STOP LINE PAVEMENT MARKING FOR SIDEROADS WITH RIGHT TURN LANE

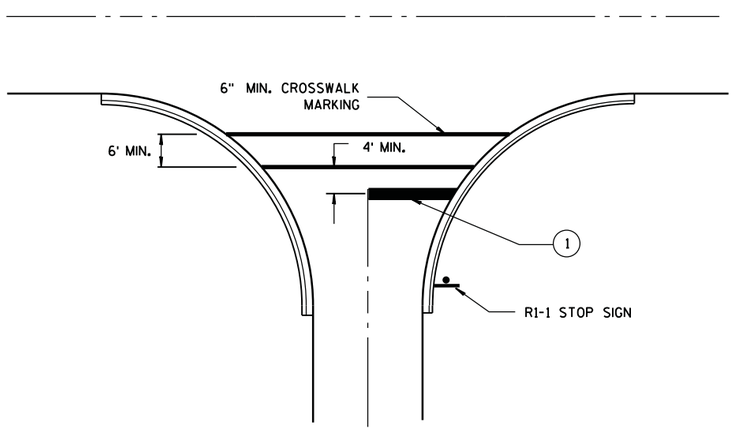

TYPICAL STOP LINE PAVEMENT MARKING FOR SIDEROADS WITH CROSSWALK MARKING

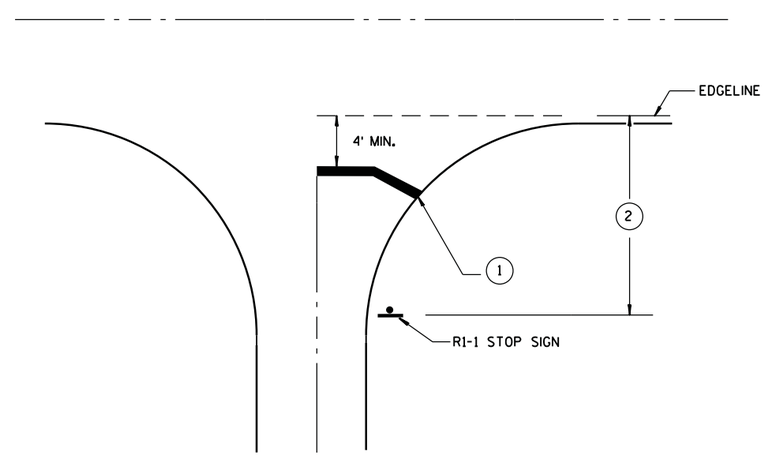

TYPICAL STOP LINE PAVEMENT MARKING WITHOUT CURB AND GUTTER

GENERAL NOTES

1. 18-INCH STOP LINES MAY BE DELETED OR ADDED BY THE PROJECT ENGINEER BASED ON VISIBILITY AND SIGHT LINES.
2. IF STOP SIGN IS LESS THAN OR EQUAL TO 40 FEET FROM THE EDGELINE THAN NO STOP LINE IS REQUIRED.
3. IF STOP SIGN IS LESS THAN OR EQUAL TO 30 FEET FROM THE FLANGELINE EXTENSION THAN NO STOP LINE IS REQUIRED.
4. MOVE CLOSER TO EDGE OF TRAVEL LANE AS NEEDED FOR VISIBILITY AND SIGHT LINES.

STOP LINE AND CROSSWALK PAVEMENT MARKING

STATE OF WISCONSIN
DEPARTMENT OF TRANSPORTATION

APPROVED
4/30/2013 — DATE
/S/ Travis Feltes — STATE TRAFFIC ENGINEER
FHWA

6
S.D.D. 15 C 33-1

NOTE: MAY BE USED ON ROADWAY WITH POSTED SPEED OF LESS THAN 40 MPH.

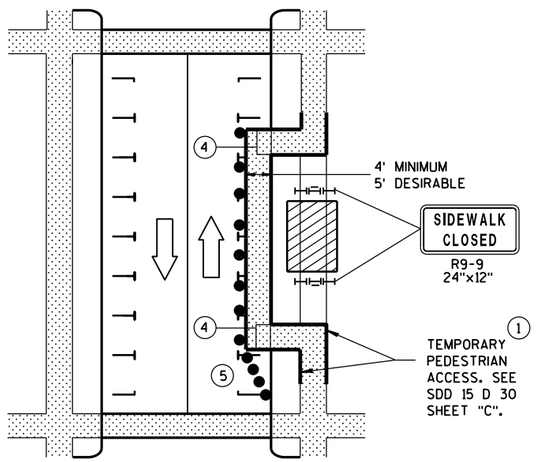

MID-BLOCK SIDEWALK CLOSURE IN PARKING LANE

NOTE: LAYOUT SAME AS ABOVE.

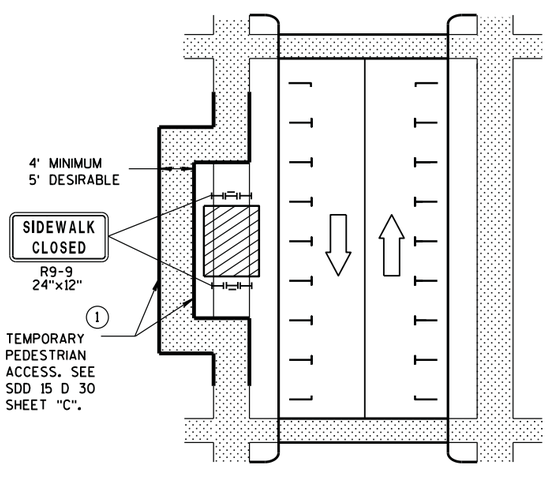

SIDEWALK DIVERSION

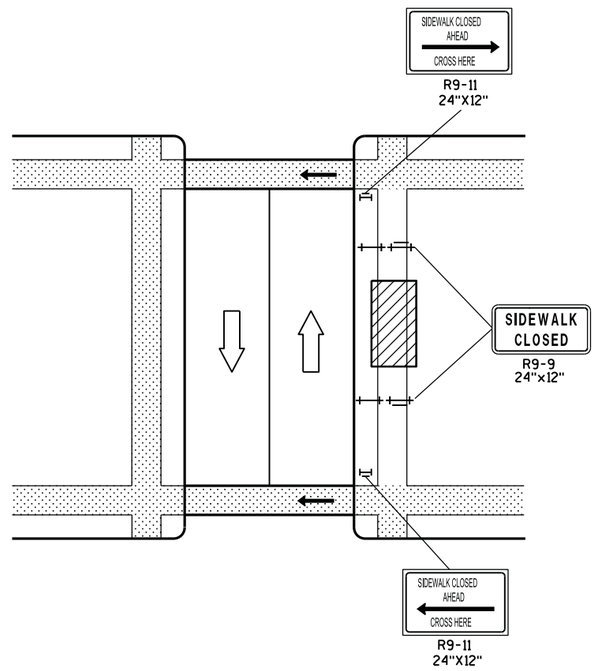

MID-BLOCK SIDEWALK CLOSURE

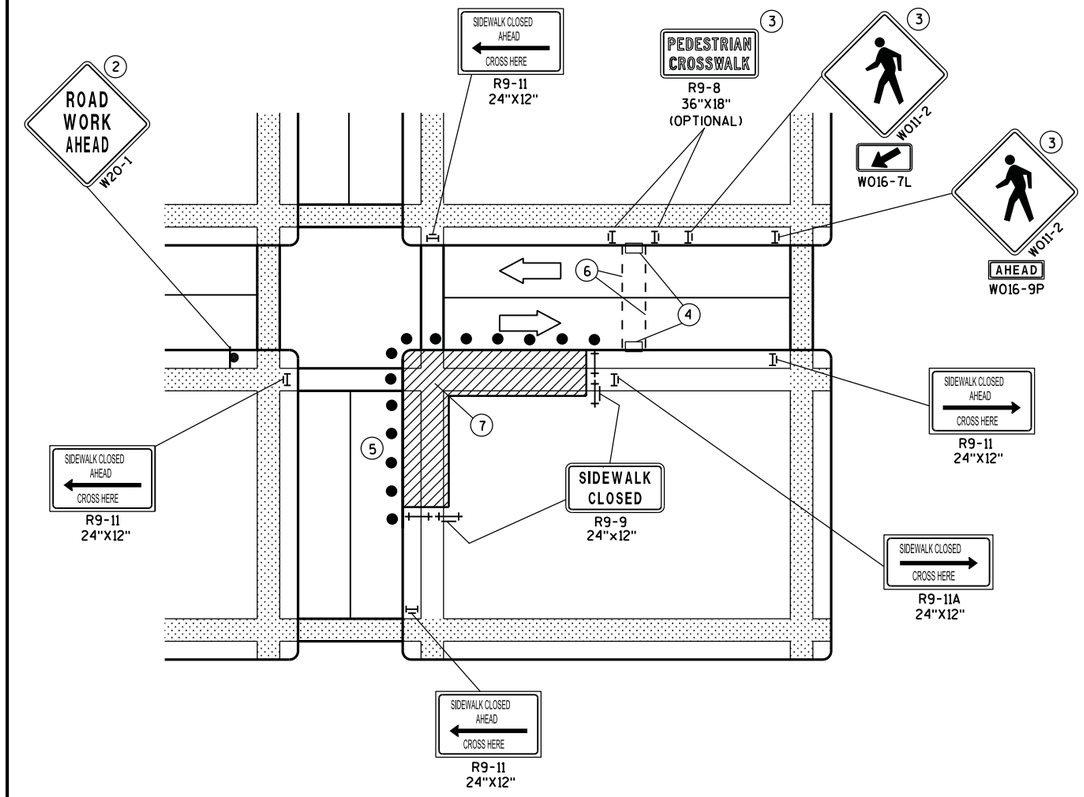

CORNER SIDEWALK CLOSURE WITH TEMPORARY CROSSWALK

GENERAL NOTES

WHEN CLOSING OR RELOCATING CROSSWALKS OR SIDEWALKS, PROVIDE DETECABLE TEMPORARY FACILITIES AND INCLUDE ACCESSIBILITY FEATURES CONSISTENT WITH EXISTING PEDESTRIAN FACILITIES.

TEMPORARY TRAFFIC CONTROL DEVICES FOR PEDESTRIANS ARE SHOWN. OTHER DEVICES MAY BE NECESSARY TO CONTROL VEHICULAR TRAFFIC. STAGE WORK, AS NECESSARY, TO PROVIDE A TEMPORARY PEDESTRIAN ACCESS ROUTE AT ALL TIMES. FOR ROADWAYS WITH NO AVAILABLE DETOURS, MAINTAIN ONE OPEN SIDEWALK AT ALL TIMES.

"WO" SIGN IS THE SAME AS "W" SIGN EXCEPT THE BACKGROUND IS ORANGE.

FOR NIGHTTIME CLOSURE USE TYPE "A" FLASHING WARNING LIGHTS ON BARRICADES, SUPPORTING SIGNS AND CLOSING SIDEWALK. USE TYPE "C" STEADY BURN LIGHTS ON CHANNELIZING DEVICES SEPARATING THE WORK AREA FROM VEHICULAR TRAFFIC.

PEDESTRIAN TRAFFIC SIGNAL DISPLAY CONTROLLING CLOSED CROSSWALK SHALL BE COVERED OR DEACTIVATED.

POST MOUNTED SIGNS LOCATED ADJACENT TO A SIDEWALK SHALL HAVE A 7 FOOT MINIMUM CLEARANCE FROM THE BOTTOM OF THE SIGN TO THE SIDEWALK SURFACE.

ALTERNATE SIDEWALK WORK BETWEEN LEFT AND RIGHT SIDE OF ROADWAY TO MAINTAIN PEDESTRIAN ACCESS.

1. IF SIDEWALK CLOSURE AFFECTS AN ACCESSIBLE AND DETECTABLE FACILITY, MAINTAIN ACCESSIBILITY AND DETECTABILITY ALONG THE ALTERNATE PEDESTRIAN ROUTE.
2. "ROAD WORK AHEAD" SIGNS ARE NOT REQUIRED IF THE SIDEWALK CLOSURE OCCURS WITHIN A LARGER WORK ZONE WHERE ADVANCE WARNING SIGNS ARE ALREADY PRESENT, OR IF THE WORK AREA AND EQUIPMENT ARE MORE THAN 2 FEET BEHIND THE CURB.
3. IF TEMPORARY PEDESTRIAN CROSSWALK IS NOT PROVIDED, OMIT R9-8 AND W011-2 SIGN ASSEMBLIES. IF PROVIDED INCLUDE ON BOTH SIDES OF THE CROSSWALK.
4. TEMPORARY CURB RAMPS. SEE SDD 15 D 30 SHEET "B".
5. DRUMS OR BARRICADES AT 25 FOOT SPACING. STREET PARKING SHALL BE PROHIBITED FOR AT LEAST 50 FEET IN ADVANCE OF THE MID-BLOCK CROSSWALK.
6. TEMPORARY PAVEMENT MARKING FOR CROSSWALK LINES.
7. LIMIT WORK TO ONE QUADRANT AT A TIME TO MINIMIZE PEDESTRIAN DISRUPTION.

LEGEND

- SIGN ON PERMANENT SUPPORT
- UNDER PEDESTRIAN TRAFFIC
- WORK AREA
- PEDESTRIAN CHANNELIZATION DEVICE
- TYPE II BARRICADE WITH/WITHOUT SIGN (ALL WITH ONE WARNING LIGHT, TYPE A, LOW-INTENSITY FLASHING)
- TYPE III BARRICADE WITH/WITHOUT SIGN (ALL WITH ONE WARNING LIGHT, TYPE A, LOW-INTENSITY FLASHING)
- DIRECTION OF TRAFFIC
- TRAFFIC CONTOL DRUM

TRAFFIC CONTROL, PEDESTRIAN ACCOMMODATION

STATE OF WISCONSIN
DEPARTMENT OF TRANSPORTATION

6

6

S.D.D. 15 D 30-2a

S.D.D. 15 D 30-2a

15D33: Traffic Control, One Lane Road with Temporary Signals

LEGEND

- SIGN ON PERMANENT SUPPORT
- REMOVING PAVEMENT MARKING
- TYPE III BARRICADE WITH ATTACHED SIGN
- CONCRETE BARRIER TEMPORARY PRECAST
- FLAGS, 16" × 16" MIN., (ORANGE)
- TRAFFIC CONTROL DRUM
- TRAFFIC CONTROL DRUM WITH TYPE "C" STEADY BURN LIGHT
- ASPHALTIC PAVEMENT WIDENING
- DIRECTION OF TRAFFIC
- 4" X 6" WOOD POST
- TEMPORARY SIGNAL WITH BACKPLATE AND 12-INCH LENSES ON BREAKAWAY POLE

W057-52
36"x24"

INSTALL ON EACH APPROACH AT THE CLOSEST INTERSECTION WITH A STATE OR COUNTY TRUNK HIGHWAY, OR AS DIRECTED BY THE ENGINEER. WIDTH ON SIGN TO BE APPROX. 1-FOOT LESS THAN AVAILABLE WIDTH. (OMIT IF AVAILABLE WIDTH IS MORE THAN 16 FEET.)

GENERAL NOTES

THE EXACT NUMBER, LOCATION AND SPACING OF ALL SIGNS AND DEVICES SHALL BE ADJUSTED TO FIT FIELD CONDITIONS.

THE SPACING BETWEEN TRAFFIC CONTROL SIGNS SHOULD BE ADJUSTED TO NOT CONFLICT WITH AND SHOULD PROVIDE A MINIMUM OF 200 FEET (500 FEET DESIRABLE) CLEARANCE TO EXISTING SIGNS THAT WILL REMAIN IN PLACE.

ALL SIGNS ARE 48"x48" UNLESS OTHERWISE NOTED.

"WO" IS THE SAME AS "W" EXCEPT THE BACKGROUND IS ORANGE.

SIGN LAYOUTS SHALL BE IN ACCORDANCE WITH THE FHWA'S MANUAL OF STANDARD HIGHWAY SIGNS OR THE WISCONSIN STANDARD SIGN PLATES.

ANY SIGNS TEMPORARY OR EXISTING, WHICH CONFLICT WITH TRAFFIC CONTROL "IN USE" SHALL BE REMOVED OR COVERED AS NEEDED AND AS APPROVED BY THE ENGINEER.

PLACE TEMPORARY PAVEMENT MARKING EDGELINE AND CENTERLINE, AND REMOVE EXISTING PAVEMENT MARKINGS IF LANE CLOSURE IS TO BE IN PLACE FOR 4 OR MORE CONTINUOUS DAYS AND NIGHTS OR AS NOTED ON DETAIL.

* 500-FOOT SPACING SHOWN IS FOR ROADWAYS WITH A PRE-CONSTRUCTION REGULATORY SPEED LIMIT OF 45 MPH OR MORE. FOR 35-40 MPH, USE 350-FOOT TYPICAL SPACING. FOR 25-30 MPH, USE 200-FOOT TYPICAL SPACING.

** USE 300' SPACING IF PRE-CONSTRUCTION REGULATORY SPEED LIMIT IS 35 MPH OR LESS.

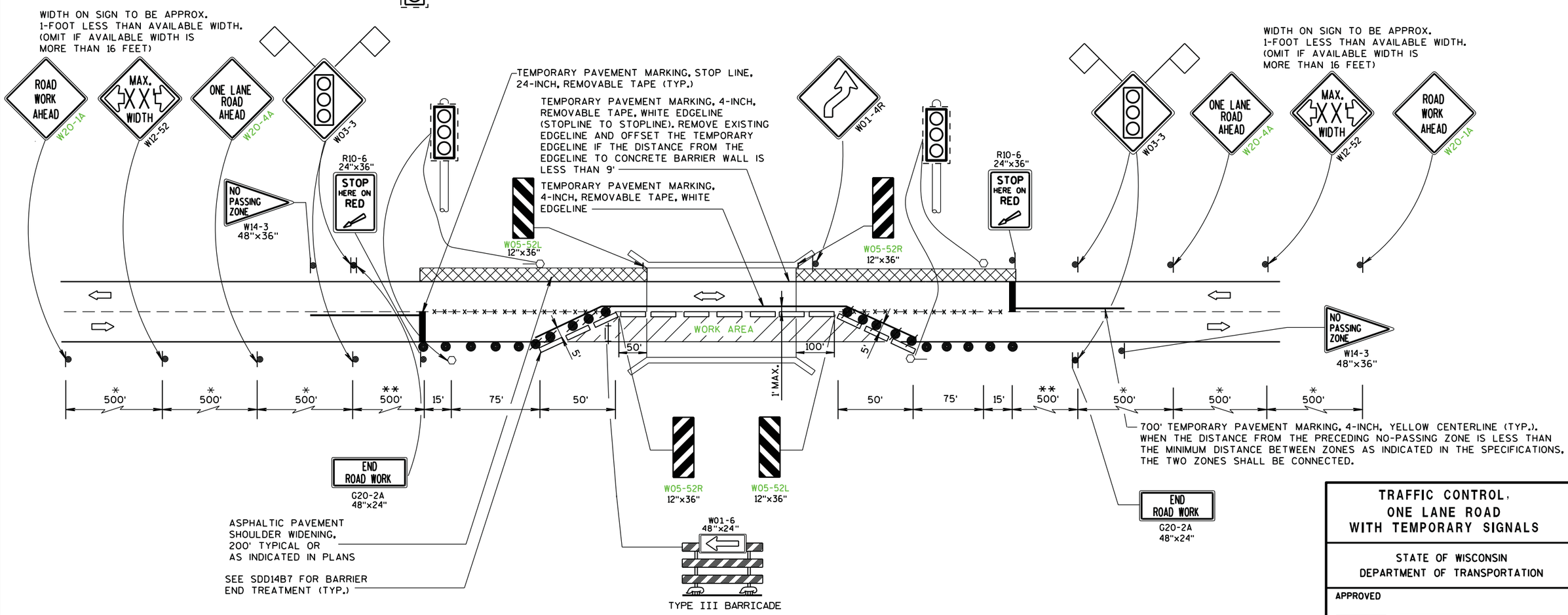

TRAFFIC CONTROL, ONE LANE ROAD WITH TEMPORARY SIGNALS	
STATE OF WISCONSIN DEPARTMENT OF TRANSPORTATION	
APPROVED	
DATE	STATE TRAFFIC ENGINEER
FHWA	

6

S.D.D. 15 D 33-4

6

S.D.D. 15 D 33-4

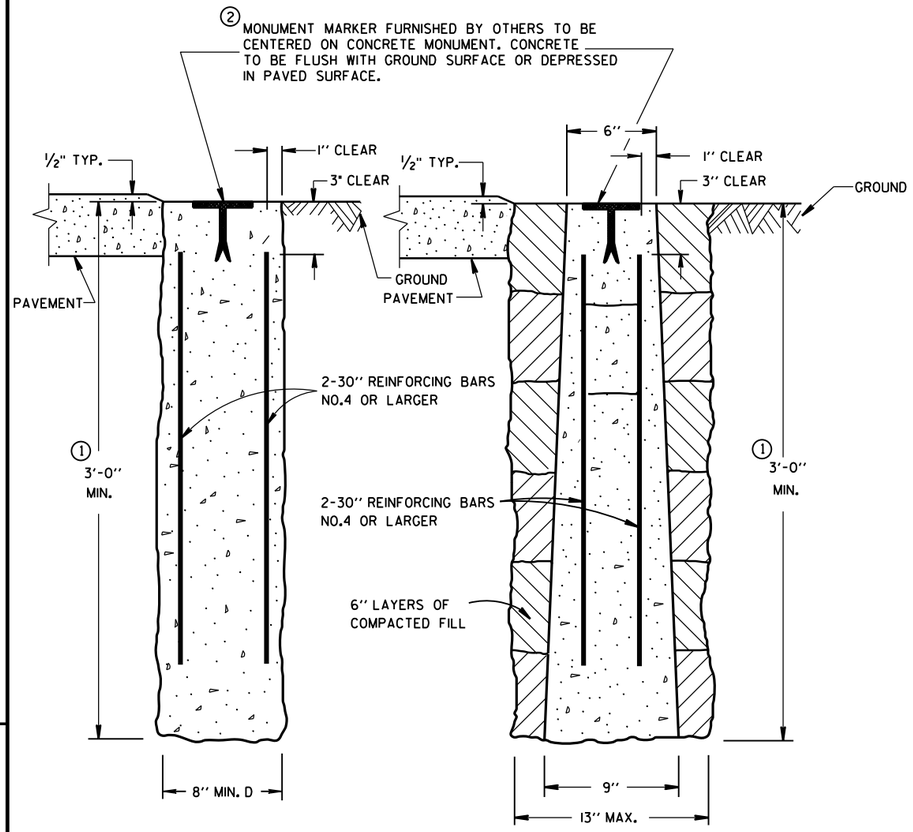

CAST-IN-PLACE

PRECAST

CONCRETE MONUMENTS

TYPE A

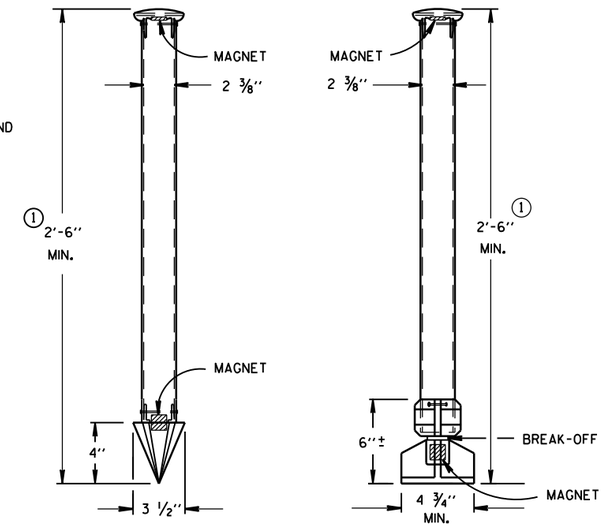

TYPE C

DRIVE-IN MONUMENT

TYPE D

BREAK-OFF MONUMENT

ALUMINUM MONUMENTS

(INCLUDES MARKER)

GENERAL NOTES

DETAILS OF CONSTRUCTION, MATERIALS AND WORKMANSHIP NOT SHOWN ON THIS DRAWING SHALL CONFORM TO THE PERTINENT REQUIREMENTS OF THE STANDARD SPECIFICATIONS AND THE APPLICABLE SPECIAL PROVISIONS.

DETAILED DRAWINGS OF PROPOSED ALTERNATE DESIGNS FOR METAL MONUMENTS OR MONUMENT COVERS SHALL BE SUBMITTED TO THE ENGINEER FOR APPROVAL.

INSTALLED METAL MONUMENTS MUST BE EASILY DETECTED WITH A DIP NEEDLE. INSERT PERMANENT MAGNETS SHALL BE ATTACHED NEAR THE TOP AND BOTTOM OF THOSE MONUMENTS CONSTRUCTED OF A METAL ALLOY WHICH IS NOT ATTRACTIVE TO A DIP NEEDLE.

THE CAST IRON MONUMENT COVER SHALL BE A "NON-ROCKING" TYPE. ADJUSTMENT OF THE COVER TO GRADE MAY BE ACCOMPLISHED BY THE USE OF MORTAR AND BRICK, OR BY EITHER PRECAST OR CAST-IN-PLACE REINFORCED CONCRETE GRADE RINGS.

MONUMENTS SHALL BE LOCATED AND PLACED AT THE DIRECTION OF THE ENGINEER.

ALUMINUM MONUMENTS AND MONUMENT COVERS SHALL BE MADE FROM AN ALUMINUM AND MAGNESIUM ALLOY AS DETERMINED BY THE MANUFACTURER.

THE MONUMENT COVERS DETAILED ON THIS DRAWING ARE NOT EQUAL ALTERNATES. MONUMENT COVERS SHALL BE CAST IRON UNLESS ALUMINUM IS SPECIFIED ELSEWHERE IN THE CONTRACT.

MONUMENT SHALL BE CAST-IN-PLACE CONCRETE UNLESS PRECAST CONCRETE OR ALUMINUM MONUMENTS ARE SPECIFIED IN THE CONTRACT OR PERMITTED BY THE ENGINEER.

① MINIMUM LENGTH SHALL BE 4'-0" FOR MONUMENTS INSTALLED IN PAVED AREAS.

② AN OFFICIAL COUNTY MONUMENT MARKER SUPPLIED BY A COUNTY MAY BE REQUIRED FOR SOME SECTION CORNERS AND WITNESS MONUMENTS INSTEAD OF THIS WIS DOT MARKER.

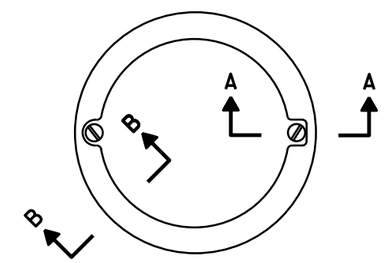

TOP VIEW

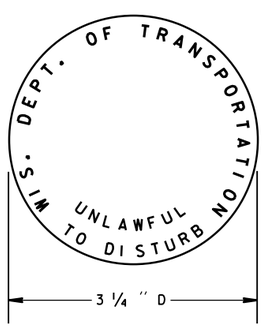

② WIS DOT MONUMENT MARKER LOGO

FOR TYPES "A", "C" & "D"

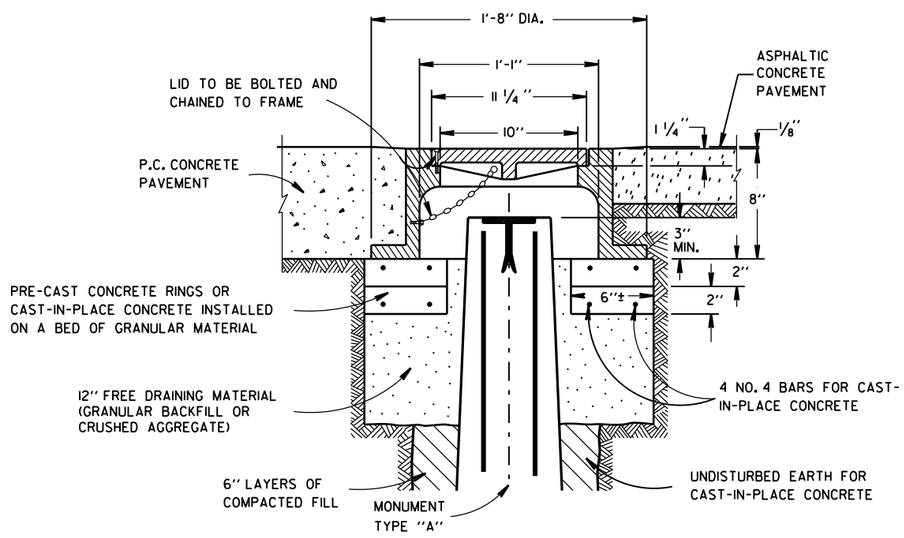

CAST IRON MONUMENT COVER

(APPROXIMATE WEIGHT - 95 LBS.)

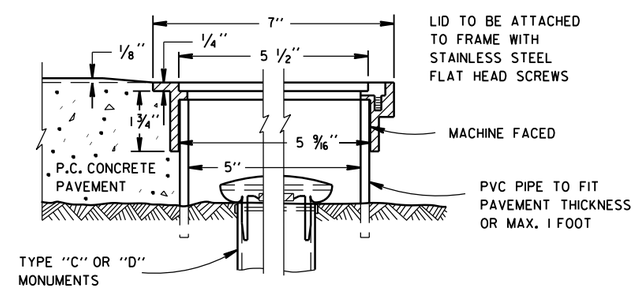

SECTION B-B SECTION A-A

ALUMINUM MONUMENT COVER

(APPROXIMATE WEIGHT 2 LBS)

(FOR CONCRETE PAVEMENT ONLY)

LANDMARK REFERENCE MOUNMENTS AND COVERS	
STATE OF WISCONSIN DEPARTMENT OF TRANSPORTATION	
APPROVED 9/22/1999 DATE	/S/ Rory L. Rhinesmith CHIEF ROADWAY DEVELOPMENT ENGINEER
FHWA	

EXISTING STRUCTURE:

THE EXISTING STRUCTURE CONSISTS OF DOUBLE 6.2'x8.7' CMPA CULVERTS

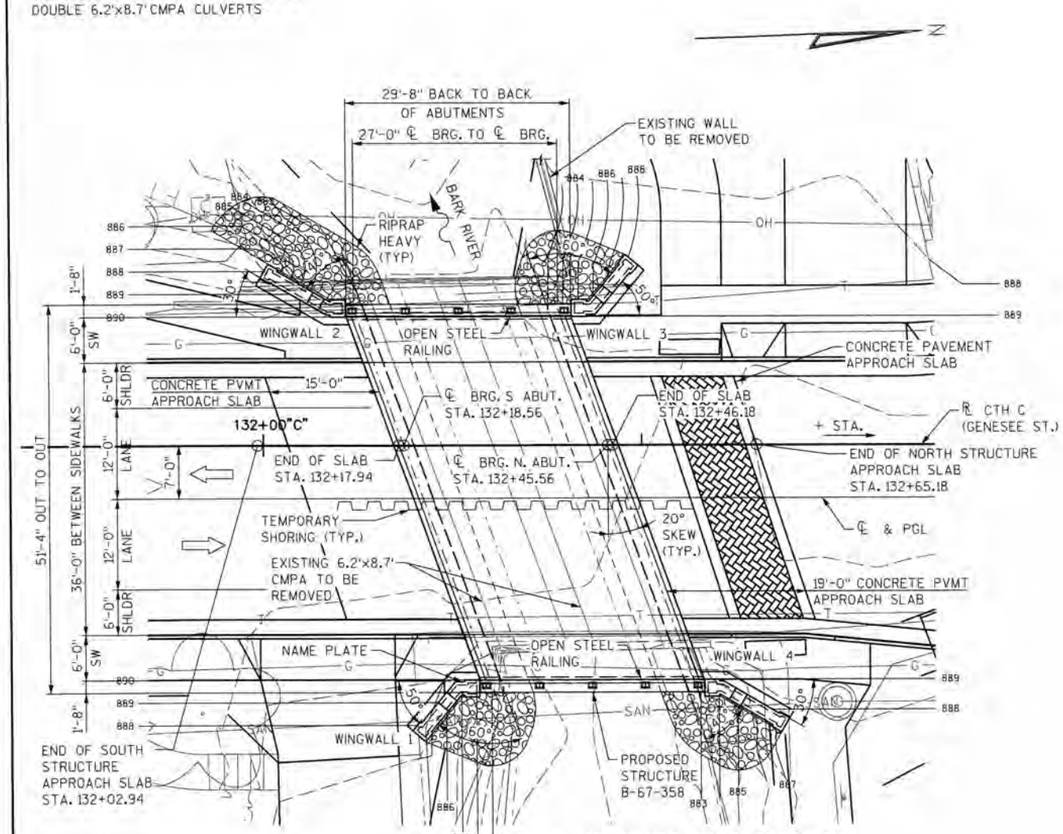

PLAN - CTH C (GENESSEE STREET) BRIDGE

C.I.P. CONCRETE SLAB BRIDGE WITH C.I.P. CONCRETE ABUTMENTS

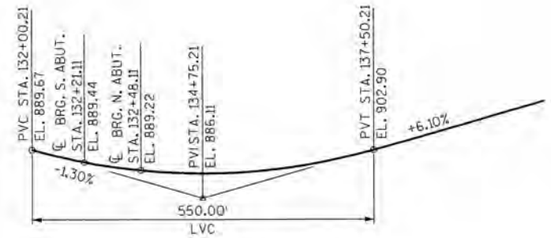

PROFILE GRADE LINE CTH C (GENESSEE STREET)

WISCONSIN WILLIAM J. ZIPPEL 38868-006 MILWAUKEE, WI 1/4/2016 PROFESSIONAL ENGINEER

DESIGN DATA

14-3775(11)

LIVE LOAD:

DESIGN LOADING: HL-93
INVENTORY RATING FACTOR: RF = 1.25
OPERATING RATING FACTOR: RF = 1.62
WISCONSIN STANDARD PERMIT VEHICLE (WIS-SPV) = 350 KIPS
DESIGN ACCOUNTS FOR FUTURE WEARING SURFACE = 20 PSF

ULTIMATE DESIGN STRESSES:

CONCRETE MASONRY SUPERSTRUCTURE	f'c = 4000 PSI
ALL OTHER	f'c = 3500 PSI
STEEL REINFORCEMENT HIGH STRENGTH BAR, GRADE 60	fy = 60 KSI

FOUNDATION DATA:

ABUTMENTS TO BE SUPPORTED ON PILING STEEL HP 12-INCH X 53 LB DRIVEN TO A REQUIRED DRIVING RESISTANCE OF 125 TONS/PILE* AT ABUTMENTS AS DETERMINED BY THE MODIFIED GATES DYNAMIC EQUATION.

* THE FACTORED AXIAL RESISTANCE OF PILES IN COMPRESSION USED FOR DESIGN IS THE REQUIRED DRIVING RESISTANCE MULTIPLIED BY A RESISTANCE FACTOR OF 0.5 USING MODIFIED GATES TO DETERMINE DRIVEN PILE CAPACITY.

EST. PILE LENGTHS: 45 FT AT S. ABUT.
45 FT AT N. ABUT.

TRAFFIC DATA CTH C (GENESSEE STREET):

AADT (2016) = 8800
AADT (2036) = 11,800
DESIGN SPEED = 30 MPH

HYDRAULIC DATA:

100 YEAR FLOW	648 CFS
100 YEAR VELOCITY	5.2 FT/SEC
Q100 HIGH WATER EL.	886.76**
2 YEAR FLOW	240 CFS
Q2 HIGH WATER EL.	885.02**
Q100 WATERWAY AREA	107 SF
DRAINAGE AREA	37 SQ MI
SCOUR CRITICAL CODE	5
REGULATORY FLOOD STAGE	887.6

** AT UPSTREAM BRIDGE FACE

LIST OF DRAWINGS:

1. GENERAL PLAN AND ELEVATION
2. SUBSURFACE EXPLORATION
3. MISC. DETAILS AND GENERAL NOTES
4. SOUTH ABUTMENT
5. SOUTH ABUTMENT DETAILS
6. NORTH ABUTMENT
7. NORTH ABUTMENT DETAILS
8. SUPERSTRUCTURE PLAN
9. SUPERSTRUCTURE DETAILS
10. TUBULAR STEEL RAILING TYPE NY4
11. MASONRY DETAILS

CONSULTANT CONTACT:

WILLIAM J. ZIPPEL, PE, SE
ALFRED BENESCH AND CO.
1300 WEST CANAL STREET, SUITE 150
MILWAUKEE, WI 53233
PHONE: 414-308-1321

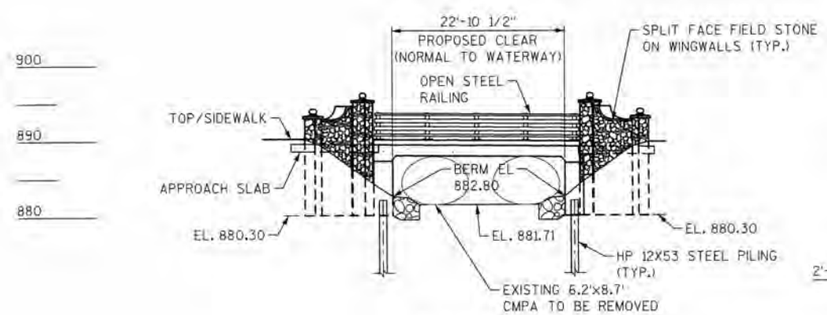

ELEVATION

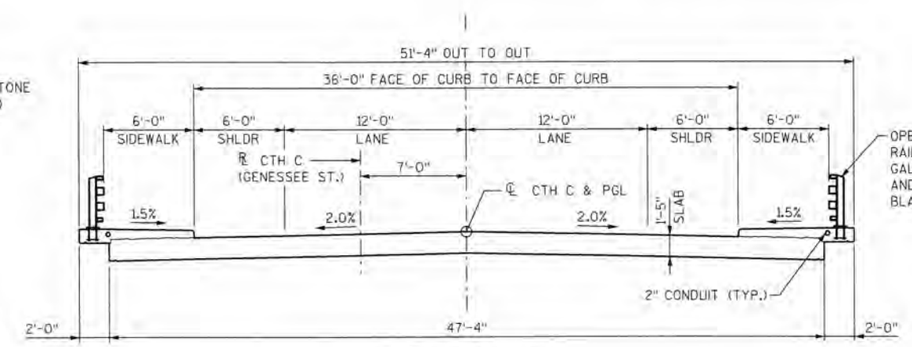

TYPICAL SECTION

(LOOKING NORTH)

NO.	DATE	REVISION	BY

benesch — Alfred Benesch & Company, 1300 West Canal Street, Suite 150, Milwaukee, Wisconsin 53233, 414-308-1310, Job No. 20200.00

STRUCTURE B-67-358

COUNTY WAUKESHA	TOWN/CITY/VILLAGE DELAFIELD
DESIGN SPEC. AASHTO LRFD BRIDGE DESIGN SPECIFICATIONS	
DESIGNED BY SCD / DESIGN CK'D. SJD	DRAWN BY WMN / PLANS CK'D. WJZ

GENERAL PLAN AND ELEVATION

SHEET 1 OF 11

FILE = 08I01C_GP&E.DGN
SCALE = 1:20

BORING #	DATE COMPLETED	NORTHING (Y)	EASTING (X)
1	10/27/14	179889.2245	637124.1602
2	10/28/14	179848.6471	637142.9614

BORINGS COMPLETED BY: PSI

REPORT COMPLETED BY: WISDOT

ALL COORDINATES REFERENCED TO WCCS NAD 83(91) WAUKESHA COUNTY

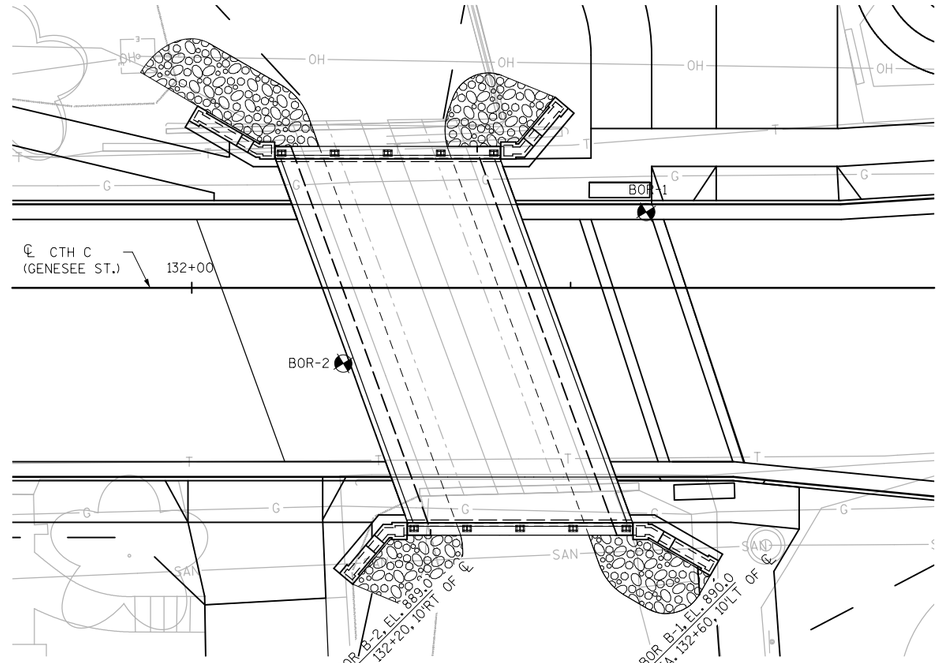

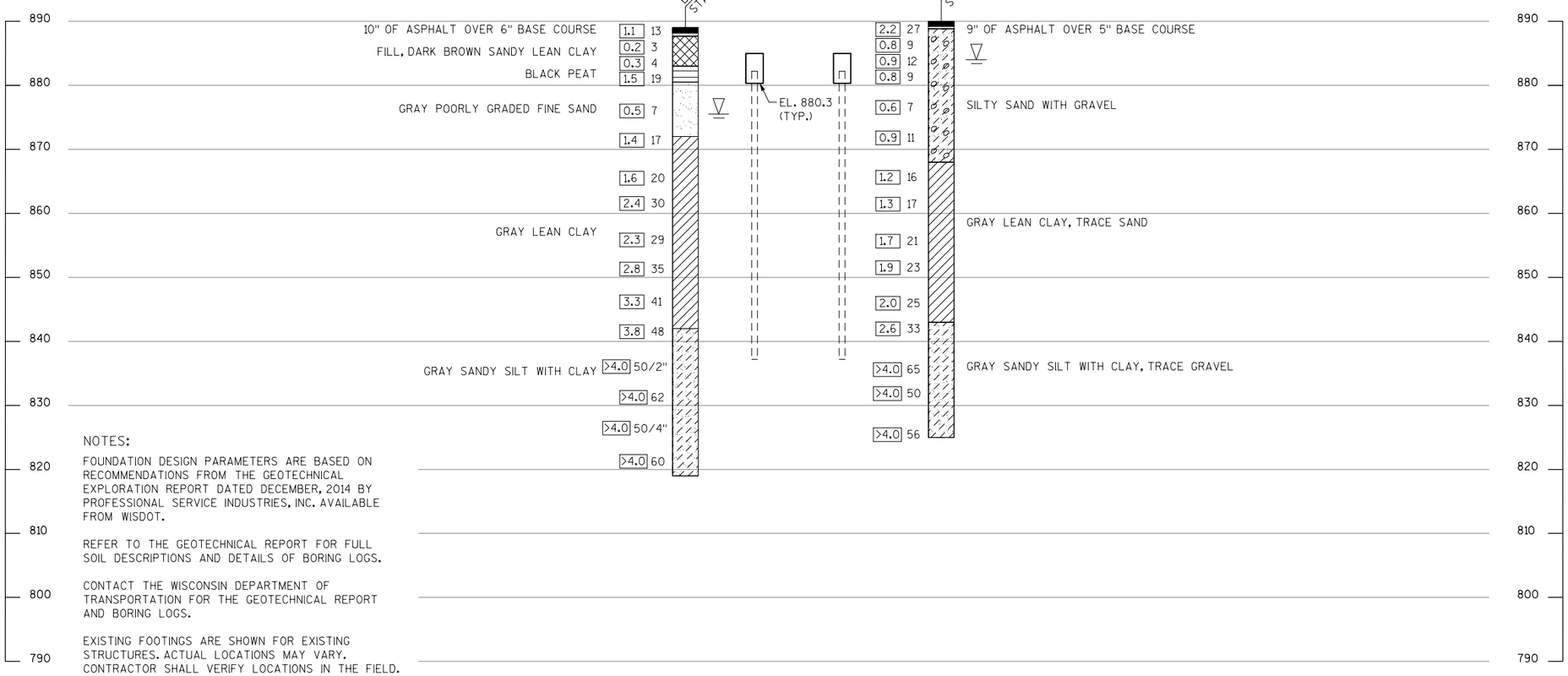

NOTES:

FOUNDATION DESIGN PARAMETERS ARE BASED ON RECOMMENDATIONS FROM THE GEOTECHNICAL EXPLORATION REPORT DATED DECEMBER, 2014 BY PROFESSIONAL SERVICE INDUSTRIES, INC. AVAILABLE FROM WISDOT.

REFER TO THE GEOTECHNICAL REPORT FOR FULL SOIL DESCRIPTIONS AND DETAILS OF BORING LOGS.

CONTACT THE WISCONSIN DEPARTMENT OF TRANSPORTATION FOR THE GEOTECHNICAL REPORT AND BORING LOGS.

EXISTING FOOTINGS ARE SHOWN FOR EXISTING STRUCTURES. ACTUAL LOCATIONS MAY VARY. CONTRACTOR SHALL VERIFY LOCATIONS IN THE FIELD.

PROJECT NUMBER

14-3775(11)

ABBREVIATIONS

F — FINE M — MEDIUM C — COARSE
WS — WEATHERED SO — SOUND

MATERIAL SYMBOLS

ASPHALT, SILT, SANDSTONE, SAND, PEAT, LIMESTONE, GRAVEL, CLAY, FILL

LEGEND OF PROBING

PROBING NO.
STA.
ELEVATION
7 AVERAGE BLOWS PER FOOT
REFUSAL 95/6

95/6=95 BLOWS FOR 6" PENETRATION PROBING TAKEN WITH A 350# WT. FALLING 18" ON A 2" O.D. POINT.

LEGEND OF BORING

BORING #/EL.
STA./OFFSET
ELEV.
SANDY GRAVEL
F.
BOULDERS OR COBBLES
SAND
SILTY CLAY
SO
LIMESTONE
UNCONFINED STRENGTH → 7.7 7
BLOWS PER FT. USING 140# WT. FALLING 30"
GROUND WATER ELEVATION AT TIME OF DRILLING

UNLESS OTHERWISE SPECIFIED, THE BLOWS PER FOOT AT THE LOCATIONS INDICATED ARE BASED ON DRIVING A 2" O.D. X 1.4" I.D. SPLIT SPOON SAMPLER WITH A 140# HAMMER HAVING A FREE FALL OF 30". THE BLOW COUNT IS TAKEN IN UNDISTURBED SOIL IMMEDIATELY BELOW A CASED OR OPEN HOLE ELIMINATING SIDE FRICTION ON THE DRIVE PIPE.

SUBSURFACE EXPLORATION FOR FOUNDATION DESIGN AND BIDDERS INFORMATION

TO OBTAIN RELATIVE DATA CONCERNING THE CHARACTER OF MATERIAL IN AND UPON WHICH THE FOUNDATION MIGHT BE BUILT, BORINGS AND/OR SOUNDINGS WERE MADE AT POINTS APPROXIMATELY AS INDICATED ON THIS DRAWING. THE DATA PRESENTED HEREIN REPRESENTS THE FINDINGS OF THE SUBSURFACE EXPLORATIONS MADE. HOWEVER, BECAUSE THE DEPTHS INVESTIGATED ARE LIMITED AND THE AREA OF THE BORINGS AND/OR SOUNDINGS IS VERY SMALL IN RELATION TO THE ENTIRE AREA, THE WISCONSIN DEPARTMENT OF TRANSPORTATION DOES NOT WARRANT CONDITIONS BELOW THE DEPTHS INVESTIGATED OR THAT THE CLASSIFICATION OF MATERIAL ENCOUNTERED IN THESE INVESTIGATIONS IS NECESSARILY TYPICAL OF THE ENTIRE SITE.

NO.	DATE	REVISION	BY

STRUCTURE B-67-358

DRAWN BY MHH | PLANS CK'D. SJD

SUBSURFACE EXPLORATION

SHEET 2 OF 11

FILE= 081020_SUBS.DGN
SCALE = 1:20

8

PROJECT NUMBER
14-3775(11)

GENERAL NOTES:

1. DRAWINGS SHALL NOT BE SCALED.
2. BAR STEEL REINFORCEMENT SHALL BE EMBEDDED 2" CLEAR UNLESS OTHERWISE SHOWN OR NOTED.
3. SLAB FALSEWORK SHALL BE SUPPORTED ON PILES OR THE SUBSTRUCTURE UNLESS AN ALTERNATE METHOD IS APPROVED BY THE ENGINEER.
4. THE FIRST OR FIRST TWO DIGITS OF THE BAR MARK SIGNIFIES THE BAR SIZE.
5. THE SLOPE OF THE FILL IN FRONT OF THE ABUTMENTS SHALL BE COVERED WITH HEAVY RIPRAP AND GEOTEXTILE FABRIC TYPE 'HR' TO THE EXTENT SHOWN ON SHEET 1 AND IN THE ABUTMENT DETAILS.
6. THE UPPER LIMITS OF EXCAVATION FOR STRUCTURES FOR THE ABUTMENTS SHALL BE THE BOTTOM OF SLOPE PROTECTION.
7. AT THE BACKFACE OF ABUTMENT ALL VOLUME WHICH CANNOT BE PLACED BEFORE ABUTMENT CONSTRUCTION AND IS NOT OCCUPIED BY THE NEW STRUCTURE SHALL BE BACKFILLED WITH BACKFILL STRUCTURE.
8. PROTECTIVE SURFACE TREATMENT TO BE APPLIED TO THE ENTIRE TOP OF DECK, THE FRONT FACE AND TOP OF THE SIDEWALKS, AND THE EDGE AND UNDERSIDE OF THE SIDEWLAKS AS SHOWN IN THE SECTION THROUGH THE SIDEWALK DETAIL.

DEMOLITION NOTES:

CONTRACTOR SHALL INSTALL TEMPORARY SHORING TO RETAIN THE FILL AROUND AND BETWEEN THE EXISTING CULVERTS DURING STAGE CONSTRUCTION.

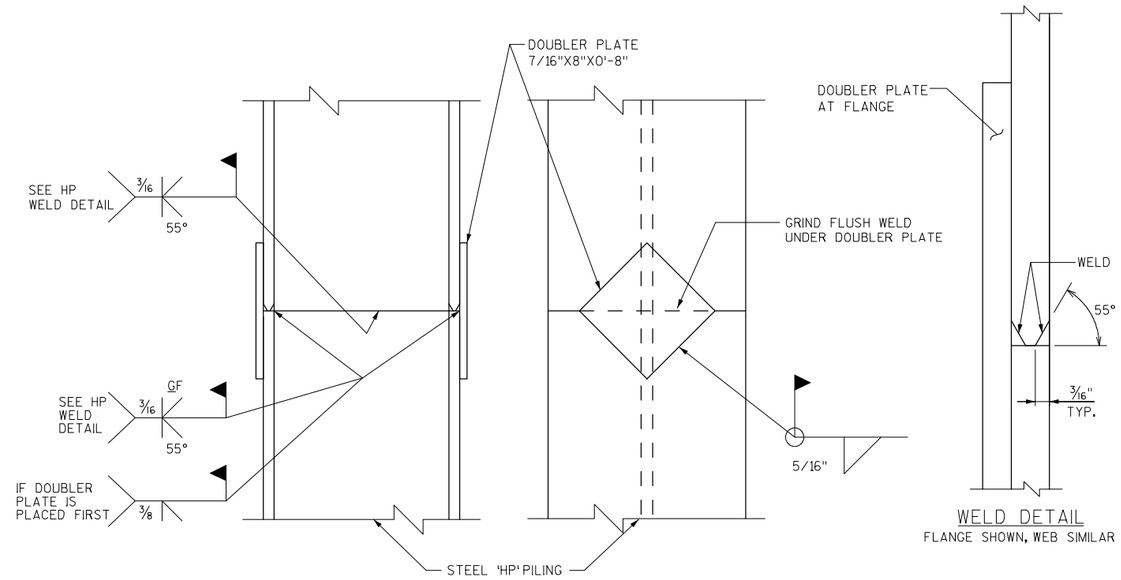

STEEL PILING SPLICE DETAILS

WELD DETAIL
FLANGE SHOWN, WEB SIMILAR

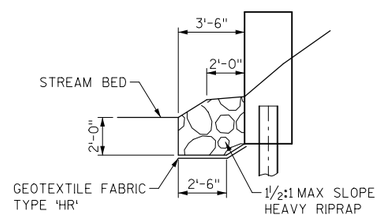

RIPRAP TOE DETAIL

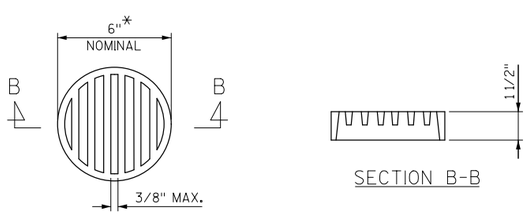

SECTION B-B

*NOTE: DIMENSIONS ARE APPROXIMATE. THE GRATE IS SIZED TO FIT INTO A PIPE COUPLING. ORIENT SHIELD SO SLOTS ARE VERTICAL.

THE RODENT SHIELD SHALL BE A PVC GRATE SIMILAR TO THIS DETAIL. THE GRATE IS COMMERCIALLY AVAILABLE AS A FLOOR STRAINER. A PIPE COUPLING IS REQUIRED FOR THE ATTACHMENT OF THE SHIELD TO THE EXPOSED END OF THE PIPE UNDERDRAIN. THE SHIELD SHALL BE FASTENED TO THE PIPE COUPLING WITH TWO OR MORE NO. 10 X 1-INCH STAINLESS STEEL SHEET METAL SCREWS.

THE RODENT SHIELD, PIPE COUPLING, AND SCREWS SHALL BE CONSIDERED INCIDENTAL TO THE BID ITEM "PIPE-UNDERDRAIN WRAPPED 6-INCH."

RODENT SHIELD

TOTAL ESTIMATE OF QUANTITIES

BID NO.	BID ITEMS	UNIT	S ABUT	N ABUT	SUPER	TOTAL
203.0200	REMOVING OLD STRUCTURE (STATION 132+26)	LS	----	----	1	1
206.1000	EXCAVATION FOR STRUCTURES BRIDGES (B-67-358)	LS	0.5	0.5	----	1
210.0100	BACKFILL STRUCTURE	CY	150	150	----	300
502.0100	CONCRETE MASONRY, BRIDGES	CY	58	56	92	206
502.3200	PROTECTIVE SURFACE TREATMENT	SY	----	----	186	186
505.0400	BAR STEEL REINFORCEMENT HS STRUCTURES	LB	5517	5397	----	10914
505.0600	BAR STEEL REINFORCEMENT HS COATED STRUCTURES	LB	876	876	18780	20532
505.0904	BAR COUPLERS NO. 4	EACH	6	6	----	12
505.0905	BAR COUPLERS NO. 5	EACH	----	----	84	84
505.0906	BAR COUPLERS NO. 6	EACH	11	11	----	22
505.0908	BAR COUPLERS NO. 8	EACH	7	7	----	14
511.1200	TEMPORARY SHORING B-67-358	SF	120	116	----	236
513.7084	RAILING STEEL TYPE NY4 B-67-358	LF	----	----	59.4	59.4
516.0500	RUBBERIZED MEMBRANE WATERPROOFING	SY	21	21	----	42
550.1120	PILING STEEL HP 12-INCH X 53 LB	LF	360	360	----	720
606.0300	RIPRAP HEAVY	CY	36	32	----	68
612.0406	PIPE UNDERDRAIN WRAPPED 6-INCH	LF	120	120	----	240
645.0120	GEOTEXTILE FABRIC TYPE HR	SY	54	47	----	101
652.0125	CONDUIT RIGID METALLIC 2-INCH	LF	----	----	16	16
652.0225	CONDUIT RIGID NONMETALLIC SCHEDULE 40 2-INCH	LF	----	----	50	50
SPV.0105.	01. STONE MASONRY FACING	LS	0.5	0.5	----	1
	NON-BID ITEMS					
	NAME PLATE					
	JOINT FILLER					
	NON-BITUMINOUS JOINT SEALER					

8

8

NO.	DATE	REVISION	BY

STRUCTURE B-67-358

DRAWN BY MHH | PLANS CK'D. SJD

MISC. DETAILS & GENERAL NOTES

SHEET 3 OF 11

FILE= 081030_QUAN.DGN
SCALE = 1:8.00002

PROJECT NUMBER
14-3775(11)

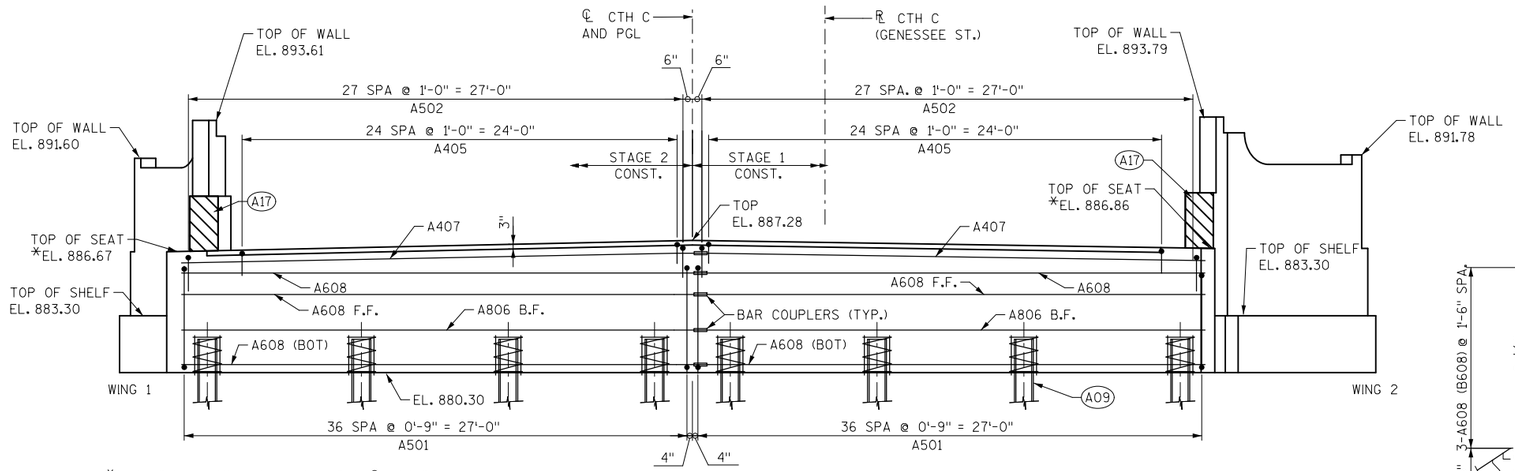

*ELEVATIONS ARE GIVEN ALONG THE ℄ OF BRG.
STONE VENEER AND CAPSTONES NOT SHOWN.

ELEVATION
(LOOKING DOWNSTATION)

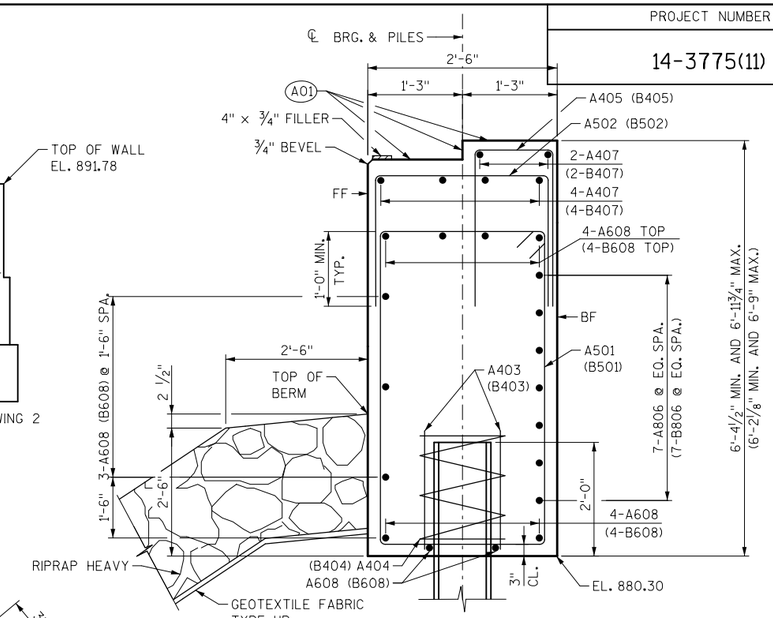

TYP. SECTION THROUGH ABUTMENT BODY

NOTE: SOUTH ABUTMENT SHOWN- NORTH ABUTMENT SIMILAR. NORTH ABUTMENT INFORMATION IS IN PARENTHESES ( ). BAR NUMBERS FOR NORTH ABUTMENT ARE THE SAME AS SOUTH ABUTMENT, BUT "A" CALLOUT IS REPLACED WITH "B"

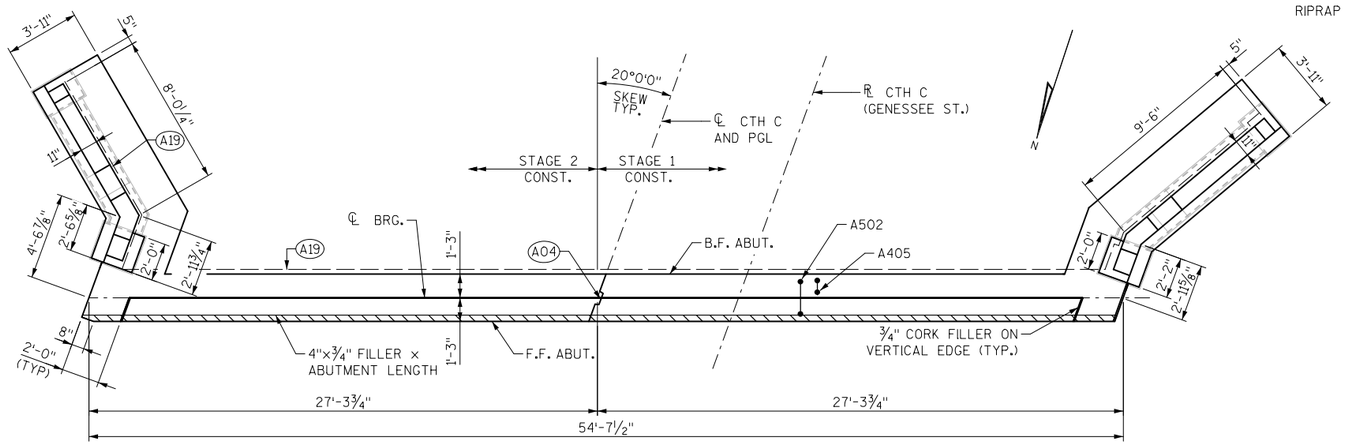

PLAN

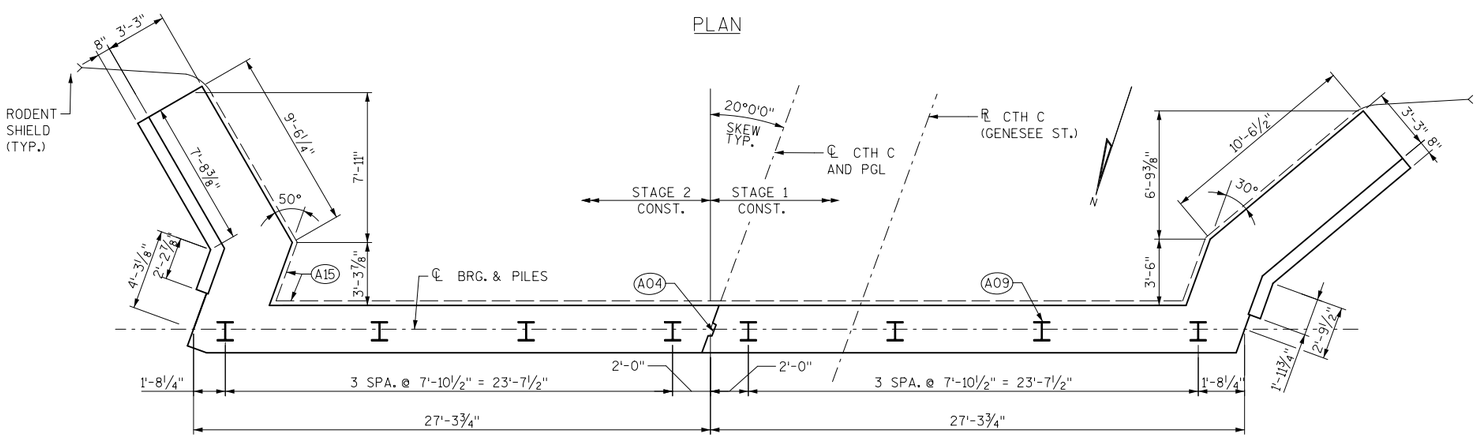

PILE PLAN

A01 STEEL TROWEL TOP SURFACE OF ABUTMENT. PLACE MULTIPLE LAYERS OF POLYETHELENE SHEET OVER ENTIRE ABUTMENT BEFORE PLACING SUPERSTRUCTURE. TOTAL THICKNESS OF SHEETS SHALL BE AT LEAST 0.03"

A04 VERT. CONSTRUCTION JOINT: KEYWAY FORMED BY A BEVELED 2×8. 3/4" "V" GROOVE @ THE FRONT FACE AND 18" R.M.W. AT BACKFACE.

A09 SUPPORT ABUTMENT ON HP12×53 STEEL PILING, ESTIMATED 45 FT LONG WITH A REQUIRED DRIVING RESISTANCE OF 125 TONS PER PILE.

A15 PIPE UNDERDRAIN WRAPPED (6-INCH). SLOPE 0.5% MIN. TO SUITABLE DRAINAGE. RODENT SCREEN REQUIRED. (SEE "MISCELLANEOUS DETAILS AND GENERAL NOTES" SHEET FOR DETAILS.

A17 1" FILLER NOT (INCLUDED IN WING LENGTH): SEAL ALL EXPOSED HORIZ. AND VERT. SURFACES OF FILLER WITH NON-STAINING GRAY NON-BITUMINOUS JOINT SEALER. (1" DEEP AND HOLD 1/8" BELOW SURFACE OF CONCRETE). EXTEND SEALER 3" BELOW GUTTER LINE AT INSIDE FACE.

A19 18" RMW (RUBBERIZED) MEMBRANE WATERPROOFING. SEAL ALL HORIZ. & VERT. JOINTS AT BACKFACE.

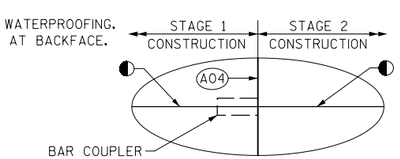

BAR COUPLER DETAIL

◐ A806, A407, & A608 BAR LENGTHS HAVE BEEN COMPUTED TO ℄ OF VERT. CONST. JOINT. MODFY LENGTHS TO BAR COUPLER MANUFACTURER RECOMMENDATIONS.

NOTES:
EXCAVATE TO BOTTOM OF ABUTMENTS BEFORE DRIVING PILES

DO NOT PLACE FILL ABOVE 3'-0" FROM BOTTOM OF ABUTMENT, UNTIL SUPERSTRUCTURE IS IN PLACE

FF DENOTES FRONT FACE

BF DENOTES BACK FACE

EF DENOTES EACH FACE

NO.	DATE	REVISION	BY

STRUCTURE B-67-358

DRAWN BY MHH | PLANS CK'D. SJD

SOUTH ABUTMENT

SHEET 4 OF 11

135

FILE= 081040_SABUT.DGN
SCALE = 1:8.00002

8

8

PROJECT NUMBER
14-3775(11)

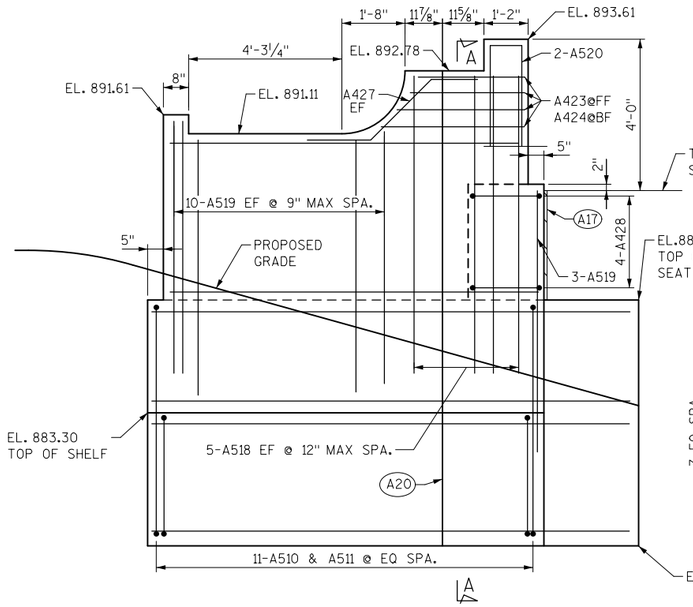

UNFOLDED ELEVATION WING 1

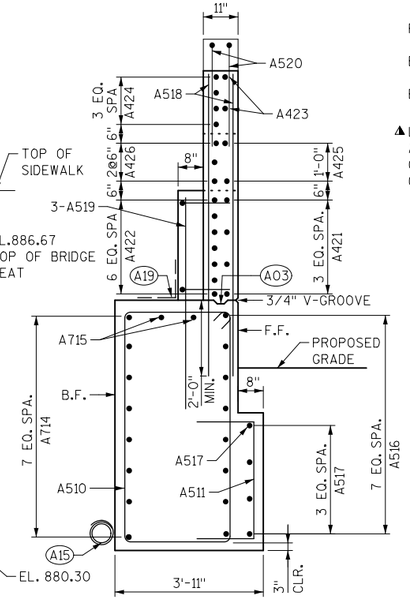

WING 1 SECTION A-A

FF DENOTES FRONT FACE

BF DENOTES BACK FACE

EF DENOTES EACH FACE

▲ LENGTH SHOWN FOR BAR SERIES IS AN AVERAGE LENGTH AND SHOULD ONLY BE USED FOR BAR WEIGHT CALCULATIONS.

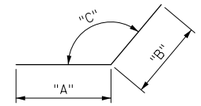

BAR NO.	DIM "A"	DIM "B"	DIM "C"
A714	5'-10"	9'-3"	130°
A516	4'-8"	8'-0"	130°
A517	2'-2"	7'-8"	130°
A421	2'-6"	7'-7"	130°
A422	2'-8"	7'-9"	130°
A425	2'-1"	7'-7"	130°
A426	2'-3"	7'-9"	130°
A736	5'-10"	10'-4"	150°
A538	3'-7"	9'-7"	150°
A539	2'-0"	9'-3"	150°
A443	2'-1"	9'-2"	150°
A444	2'-2"	9'-3"	150°
A447	1'-8"	9'-2"	150°
A448	1'-9"	9'-3"	150°

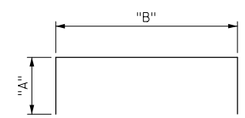

BAR NO.	DIM "A"	DIM "B"
A502	1'-7"	2'-2"
A405	1'-8"	11"
A511	1'-8"	2'-7"
A520	2'-10"	10"
A428	1'-3"	1'-10"
A533	1'-8"	2'-7"
A542	2'-10"	10"
A450	1'-3"	1'-10"

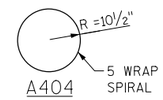

A404

BILL OF BARS SOUTH ABUTMENT

876 # COATED
5517 # UNCOATED

BAR NO.	COATED BAR	NO. REQ'D	LENGTH	BENT BAR	BUNDLED	BAR SERIES ▲	LOCATION
A501		74	16'-2"	X			BODY - STIRRUPS
A502		56	5'-1"	X			BODY - 'U' STIRRUPS
A403		16	2'-0"				PILES - VERTICAL
A404		8	28'-0"	X			PILES - SPIRALS
A405		50	4'-1"	X			BODY - 'U' STIRRUPS
A806		14	27'-1"				BODY - HORIZONTAL - BF
A407		12	27'-1"				BODY - HORIZONTAL - TOP, EF
A608		22	27'-1"				BODY - HORIZONTAL - TOP, BTM, & FF
A510		11	17'-6"	X			WING 1 - MAIN STIRRUP
A511		11	5'-8"	X			WING 1 - VERTICAL 'U' FF
A714		8	14'-11"	X			WING 1 - HORIZONTAL BF
A715		2	14'-4"	X			WING 1 - HORIZONTAL TOP
A516		8	12'-7"	X			WING 1 - HORIZONTAL FF
A517		4	9'-9"	X			WING 1 - HORIZONTAL FF - IN SHELF
A518	X	10	7'-11"				WING 1 STEM - VERTICAL EF
A519	X	26	6'-9"				WING 1 STEM - VERTICAL EF
A520	X	2	6'-4"				WING 1 STEM - VERTICAL EF
A421	X	4	10'-0"	X			WING 1 STEM - HORIZONTAL FF
A422	X	7	10'-4"	X			WING 1 STEM - HORIZONTAL BF
A423	X	2	3'-3"	X		X	WING 1 STEM - HORIZONTAL - SERIES FF
A424	X	4	3'-7"	X		X	WING 1 STEM - HORIZONTAL - SERIES BF
A425	X	2	9'-7"	X			WING 1 STEM - HORIZONTAL FF
A426	X	3	9'-11"	X			WING 1 STEM - HORIZONTAL BF
A427	X	2	4'-4"	X			WING 1 STEM - HORIZONTAL EF
A428	X	4	4'-2"	X			WING 1 STEM - HORIZONTAL BF - IN SHELF
A532		14	18'-2"	X			WING 2 - MAIN STIRRUP
A533		14	5'-8"	X			WING 2 - VERTICAL 'U' FF
A736		8	16'-0"	X			WING 2 - HORIZONTAL BF
A737		2	15'-4"	X			WING 2 - HORIZONTAL TOP
A538		8	13'-0"	X			WING 2 - HORIZONTAL FF
A539		4	11'-1"	X			WING 2 - HORIZONTAL FF - IN SHELF
A540	X	10	7'-11"				WING 2 STEM - VERTICAL EF
A541	X	30	6'-10"				WING 2 STEM - VERTICAL EF
A542	X	2	6'-4"				WING 2 STEM - VERTICAL EF
A443	X	4	11'-2"	X			WING 2 STEM - HORIZONTAL FF
A444	X	7	11'-4"	X			WING 2 STEM - HORIZONTAL BF
A445	X	2	3'-0"	X		X	WING 2 STEM - HORIZONTAL - SERIES FF
A446	X	4	3'-1"	X		X	WING 2 STEM - HORIZONTAL - SERIES BF
A447	X	2	10'-9"	X			WING 2 STEM - HORIZONTAL FF
A448	X	3	10'-11"	X			WING 2 STEM - HORIZONTAL BF
A449	X	2	4'-6"	X			WING 2 STEM - HORIZONTAL EF
A450	X	4	4'-2"	X			WING 2 STEM - HORIZONTAL BF - IN SHELF

(A03) OPTIONAL CONST. JOINT: KEYWAY FORMED BY BEVELED 2×6. (18" R.M.W. @ B.F. & 3/4" "V" GROOVE @ F.F. IF JOINT IS USED).

(A15) PIPE UNDERDRAIN WRAPPED (6-INCH). SLOPE 0.5% MIN. TO SUITABLE DRAINAGE. RODENT SCREEN REQUIRED. (SEE "MISCELLANEOUS DETAILS AND GENERAL NOTES" SHEET FOR DETAILS.)

(A17) 1" NOT FILLER (INCLUDED IN WING LENGTH): SEAL ALL EXPOSED HORIZ. AND VERT. SURFACES OF FILLER WITH NON-STAINING GRAY NON-BITUMINOUS JOINT SEALER. (1" DEEP AND HOLD 1/8" BELOW SURFACE OF CONCRETE). EXTEND SEALER 3" BELOW GUTTER LINE AT INSIDE FACE.

(A19) 18" RMW (RUBBERIZED) MEMBRANE WATERPROOFING. SEAL ALL HORIZ. & VERT. JOINTS AT BACKFACE.

(A20) FRONT FACE SHOWN UNFOLDED ABOUT INSIDE CORNER ON FF OF WALL. DIMENSIONS SHOWN ALONG FF OF CONCRETE WALL.

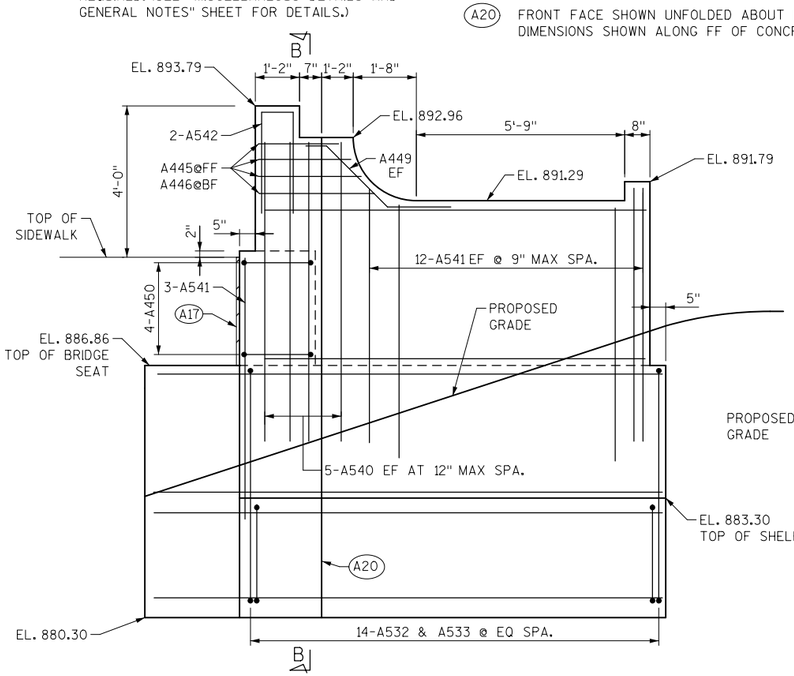

UNFOLDED ELEVATION WING 2

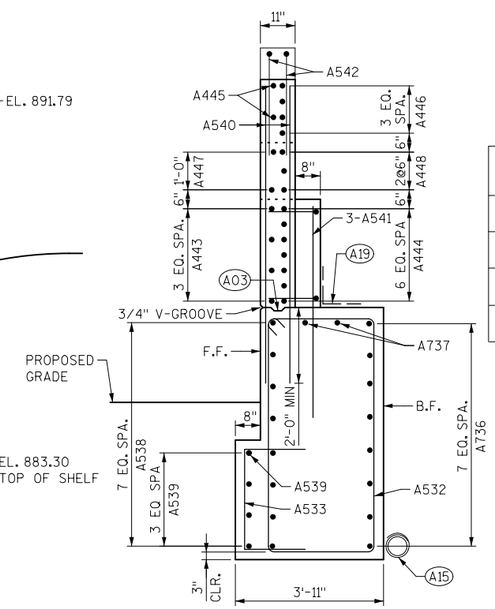

WING 2 SECTION B-B

BAR SERIES TABLE

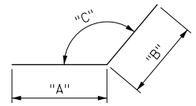

BAR NO.	# REQUIRED	DIM "A"	DIM "B"	DIM "C"
A423	1 SERIES OF 2	2'-1"	VARIES 11" TO 1'-7"	130°
A424	1 SERIES OF 4	2'-3"	VARIES 1'-2" TO 1'-10"	130°
A445	1 SERIES OF 2	1'-8"	VARIES 1'-1" TO 1'-9"	150°
A446	1 SERIES OF 4	1'-9"	VARIES 1'-2" TO 1'-10"	150°

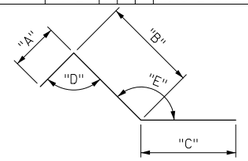

BAR NO.	DIM "A"	DIM "B"	DIM "C"	DIM "D"	DIM "E"
A715	1'-2"	5'-0"	8'-6"	90°	130°
A737	1'-2"	4'-3"	10'-3"	90°	150°

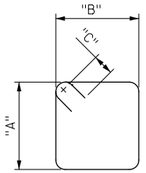

BAR NO.	DIM "A"	DIM "B"	DIM "C"
A501	5'-10"	2'-2"	4"
A510	5'-9"	2'-11"	4"
A532	6'-1"	2'-11"	4"

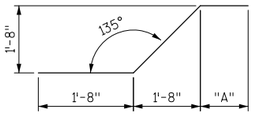

BAR NO.	DIM "A"
A427	6"
A449	7"

NO.	DATE	REVISION	BY

STRUCTURE B-67-358

DRAWN BY MHH | PLANS CK'D. SJD

SOUTH ABUTMENT DETAILS

SHEET 5 OF 11

136

FILE= 081050_SADET.DGN
SCALE = 1:4.00001

8

8

PROJECT NUMBER
14-3775(11)

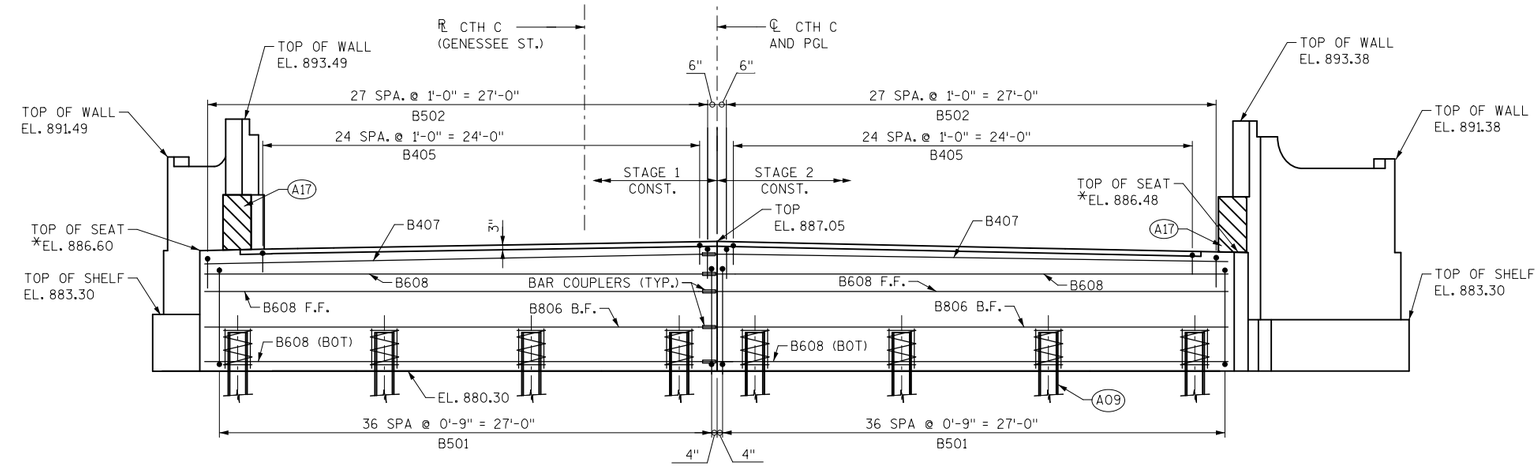

*ELEVATIONS ARE GIVEN ALONG THE ℄ OF BRG.
STONE VENEER AND CAPSTONES NOT SHOWN.

ELEVATION
(LOOKING UPSTATION)

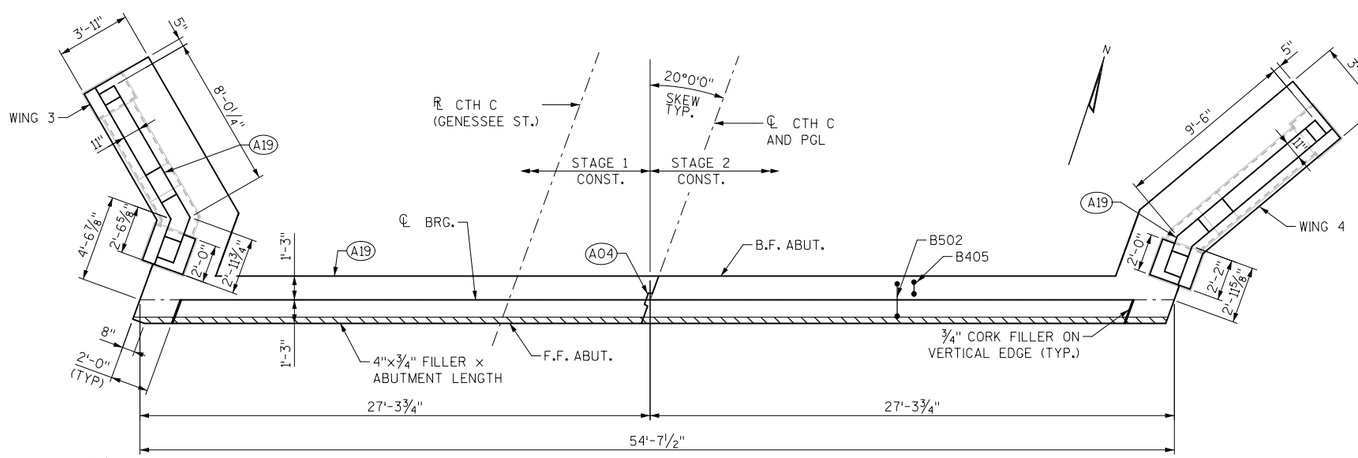

PLAN

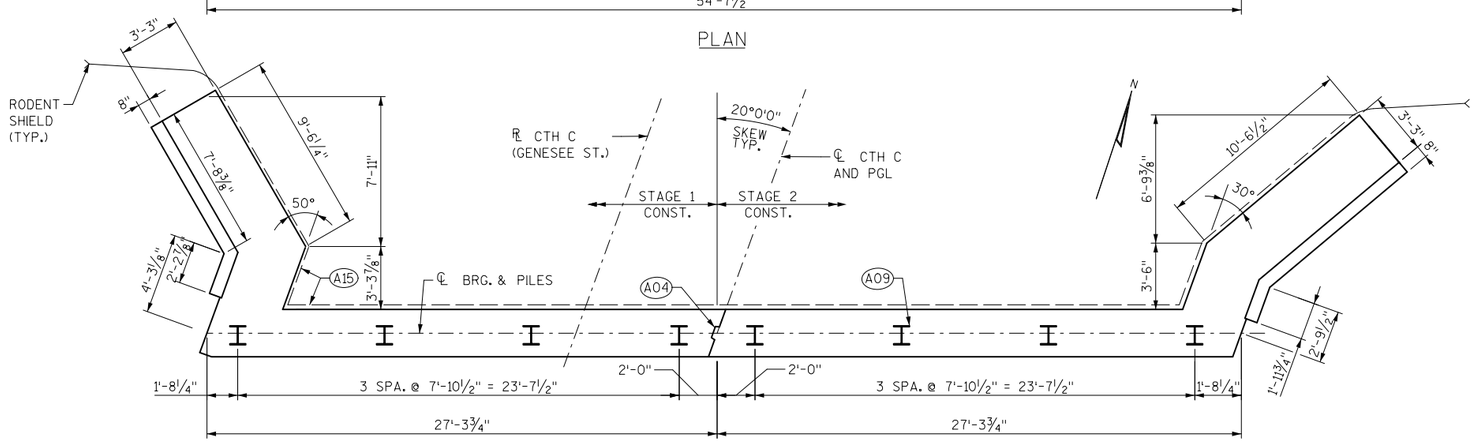

PILE PLAN

A04 VERT. CONSTRUCTION JOINT: KEYWAY FORMED BY A BEVELED 2x8. 3/4" "V" GROOVE @ THE FRONT FACE AND 18" R.M.W. AT BACKFACE.

A09 SUPPORT ABUTMENT ON HP12x53 STEEL PILING, ESTIMATED 45 FT LONG WITH A REQUIRED DRIVING RESISTANCE OF 125 TONS PER PILE.

A15 PIPE UNDERDRAIN WRAPPED (6-INCH). SLOPE 0.5% MIN. TO SUITABLE DRAINAGE. RODENT SCREEN REQUIRED. (SEE "MISCELLANEOUS DETAILS AND GENERAL NOTES" SHEET FOR DETAILS.

A17 1" FILLER (NOT INCLUDED IN WING LENGTH): SEAL ALL EXPOSED HORIZ. AND VERT. SURFACES OF FILLER WITH NON-STAINING GRAY NON-BITUMINOUS JOINT SEALER. (1" DEEP AND HOLD 1/8" BELOW SURFACE OF CONCRETE). EXTEND SEALER 3" BELOW GUTTER LINE AT INSIDE FACE.

A19 18" RMW (RUBBERIZED) MEMBRANE WATERPROOFING. SEAL ALL HORIZ. & VERT. JOINTS AT BACKFACE.

NOTES:
EXCAVATE TO BOTTOM OF ABUTMENTS BEFORE DRIVING PILES

DO NOT PLACE FILL ABOVE 3'-0" FROM BOTTOM OF ABUTMENT, UNTIL SUPERSTRUCTURE IS IN PLACE

FF DENOTES FRONT FACE

BF DENOTES BACK FACE

EF DENOTES EACH FACE

NO.	DATE	REVISION	BY

STRUCTURE B-67-358

DRAWN BY MHH | PLANS CK'D. SJD

NORTH ABUTMENT

SHEET 6 OF 11

FILE= 081060_NABUT.DGN
SCALE = 1:8.00002

8

8

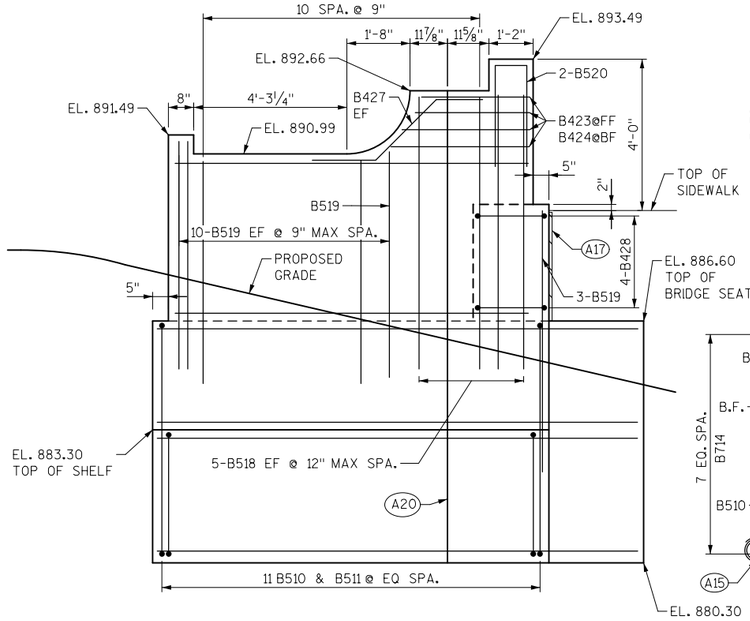

UNFOLDED ELEVATION WING 3

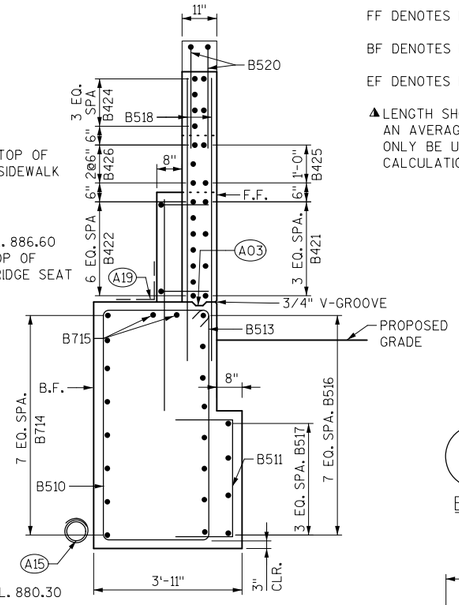

WING 3 SECTION

FF DENOTES FRONT FACE

BF DENOTES BACK FACE

EF DENOTES EACH FACE

▲ LENGTH SHOWN FOR BAR SERIES IS AN AVERAGE LENGTH AND SHOULD ONLY BE USED FOR BAR WEIGHT CALCULATIONS.

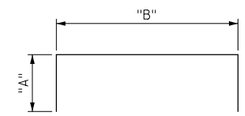

BAR NO.	DIM "A"	DIM "B"
B502	1'-7"	2'-2"
B405	1'-8"	11"
B511	1'-8"	2'-7"
B520	2'-10"	10"
B428	1'-3"	1'-10"
B533	1'-8"	2'-7"
B542	2'-10"	10"
B450	1'-3"	1'-10"

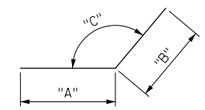

BAR NO.	DIM "A"	DIM "B"	DIM "C"
B714	5'-10"	9'-3"	130°
B516	4'-8"	8'-0"	130°
B517	2'-2"	7'-8"	130°
B421	2'-6"	7'-7"	130°
B422	2'-8"	7'-9"	130°
B425	2'-1"	7'-7"	130°
B426	2'-3"	7'-9"	130°
B736	5'-10"	10'-4"	150°
B538	3'-7"	9'-7"	150°
B539	2'-0"	9'-3"	150°
B443	2'-1"	9'-2"	150°
B444	2'-2"	9'-3"	150°
B447	1'-8"	9'-2"	150°
B448	1'-9"	9'-3"	150°

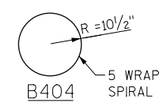

B404

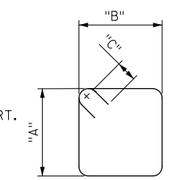

BAR NO.	DIM "A"	DIM "B"	DIM "C"
B501	5'-10"	2'-2"	4"
B510	5'-10"	2'-11"	4"
B532	5'-9"	2'-11"	4"

BILL OF BARS NORTH ABUTMENT

BAR NO.	COATED BAR	NO. REQ'D	LENGTH	BENT BAR	BUNDLED	BAR SERIES ▲	876 # COATED 5397 # UNCOATED LOCATION
B501		74	16'-2"	X			BODY - STIRRUPS
B502		56	4'-9"	X			BODY - 'U' STIRRUPS
B403		16	2'-0"				PILES - VERTICAL
B404		8	28'-0"	X			PILES - SPIRALS
B405		50	4'-1"	X			BODY - 'U' STIRRUPS
B806		14	27'-1"				BODY - HORIZONTAL - BF
B407		12	27'-1"				BODY - HORIZONTAL - TOP, EF
B608		22	27'-1"				BODY - HORIZONTAL - TOP, BTM, & FF
B510		14	17'-8"	X			WING 3 - MAIN STIRRUP
B511		11	5'-8"	X			WING 3 - VERTICAL 'U' FF
B714		8	14'-11"	X			WING 3 - HORIZONTAL BF
B715		2	14'-4"	X			WING 3 - HORIZONTAL TOP
B516		8	12'-7"	X			WING 3 - HORIZONTAL FF
B517		4	9'-9"	X			WING 3 - HORIZONTAL FF - IN SHELF
B518	X	10	7'-11"				WING 3 STEM - VERTICAL EF
B519	X	26	6'-9"				WING 3 STEM - VERTICAL EF
B520	X	2	6'-4"				WING 3 STEM - VERTICAL EF
B421	X	4	10'-0"	X			WING 3 STEM - HORIZONTAL FF
B422	X	7	10'-4"	X			WING 3 STEM - HORIZONTAL BF
B423	X	2	3'-3"	X		X	WING 3 STEM - HORIZONTAL - SERIES FF
B424	X	4	3'-7"	X		X	WING 3 STEM - HORIZONTAL - SERIES BF
B425	X	2	9'-7"	X			WING 3 STEM - HORIZONTAL FF
B426	X	3	9'-11"	X			WING 3 STEM - HORIZONTAL BF
B427	X	2	4'-4"	X			WING 3 STEM - HORIZONTAL EF
B428	X	4	4'-2"	X			WING 3 STEM - HORIZONTAL BF - IN SHELF
B532		14	17'-6"	X			WING 4 - MAIN STIRRUP
B533		14	5'-8"	X			WING 4 - BOTTOM HORIZONTAL 'U' FF
B736		8	16'-0"	X			WING 4 - HORIZONTAL BF
B737		2	15'-4"	X			WING 4 - HORIZONTAL TOP
B538		8	13'-0"	X			WING 4 - HORIZONTAL FF
B539		4	11'-1"	X			WING 4 - HORIZONTAL FF - IN SHELF
B540	X	10	7'-11"				WING 4 STEM - VERTICAL EF
B541	X	30	6'-10"				WING 4 STEM - VERTICAL EF
B542	X	2	6'-4"				WING 4 STEM - VERTICAL EF
B443	X	4	11'-2"	X			WING 4 STEM - HORIZONTAL FF
B444	X	7	11'-4"	X			WING 4 STEM - HORIZONTAL BF
B445	X	2	3'-0"	X		X	WING 4 STEM - HORIZONTAL - SERIES FF
B446	X	4	3'-1"	X		X	WING 4 STEM - HORIZONTAL - SERIES BF
B447	X	2	10'-9"	X			WING 4 STEM - HORIZONTAL FF
B448	X	3	10'-11"	X			WING 4 STEM - HORIZONTAL BF
B449	X	2	4'-6"	X			WING 4 STEM - HORIZONTAL EF
B450	X	4	4'-2"	X			WING 4 STEM - HORIZONTAL BF - IN SHELF

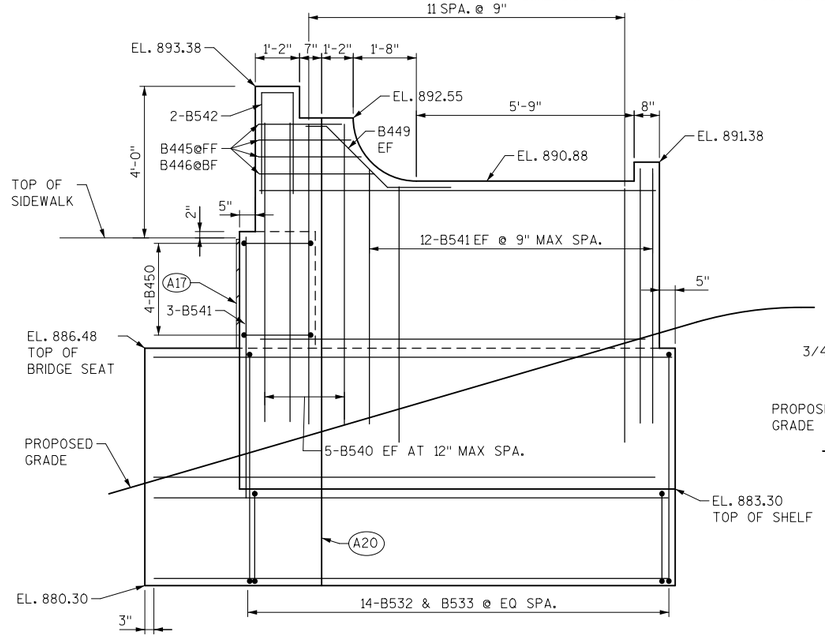

UNFOLDED ELEVATION WING 4

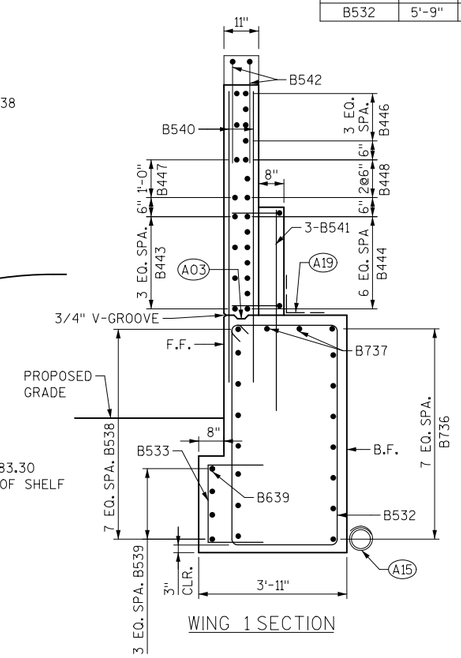

WING 1 SECTION

A03 OPTIONAL CONST. JOINT: KEYWAY FORMED BY BEVELED 2x6. (18" R.M.W. @ B.F. & 3/4" "V" GROOVE @ F.F. IF JOINT IS USED).

A15 PIPE UNDERDRAIN WRAPPED (6-INCH). SLOPE 0.5% MIN. TO SUITABLE DRAINAGE. RODENT SCREEN REQUIRED. (SEE "MISCELLANEOUS DETAILS AND GENERAL NOTES" SHEET FOR DETAILS.)

A17 1" FILLER (NOT INCLUDED IN WING LENGTH): SEAL ALL EXPOSED HORIZ. AND VERT. SURFACES OF FILLER WITH NON-STAINING GRAY NON-BITUMINOUS JOINT SEALER. (1" DEEP AND HOLD 1/8" BELOW SURFACE OF CONCRETE). EXTEND SEALER 3" BELOW GUTTER LINE AT INSIDE FACE.

A19 18" RMW (RUBBERIZED) MEMBRANE WATERPROOFING. SEAL ALL HORIZ. & VERT. JOINTS AT BACKFACE.

A20 FRONT FACE SHOWN UNFOLDED ABOUT INSIDE CORNER ON FF OF WALL DIMENSIONS SHOWN ALONG FF OF CONCRETE WALL

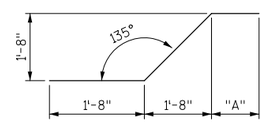

BAR NO.	DIM "A"
B427	6"
B449	7"

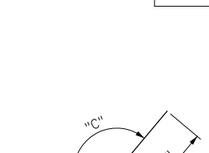

BAR SERIES TABLE

BAR NO.	# REQUIRED	DIM "A"	DIM "B"	DIM "C"
B423	1 SERIES OF 2	2'-1"	VARIES 11" TO 1'-7"	130°
B424	1 SERIES OF 4	2'-3"	VARIES 1'-2" TO 1'-10"	130°
B445	1 SERIES OF 2	1'-8"	VARIES 1'-1" TO 1'-9"	150°
B446	1 SERIES OF 4	1'-9"	VARIES 1'-2" TO 1'-10"	150°

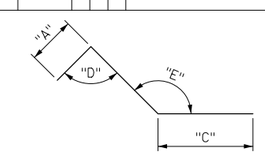

BAR NO.	DIM "A"	DIM "B"	DIM "C"	DIM "D"	DIM "E"
B715	1'-2"	5'-0"	8'-6"	90°	130°
B737	1'-2"	4'-3"	10'-3"	90°	150°

NO.	DATE	REVISION	BY

STRUCTURE B-67-358

DRAWN BY MHH | PLANS CK'D. SJD

NORTH ABUTMENT DETAILS

SHEET 7 OF 11

FILE= 081070_NADET.DGN
SCALE = 1:4.00001

8

8

PROJECT NUMBER
14-3775(11)

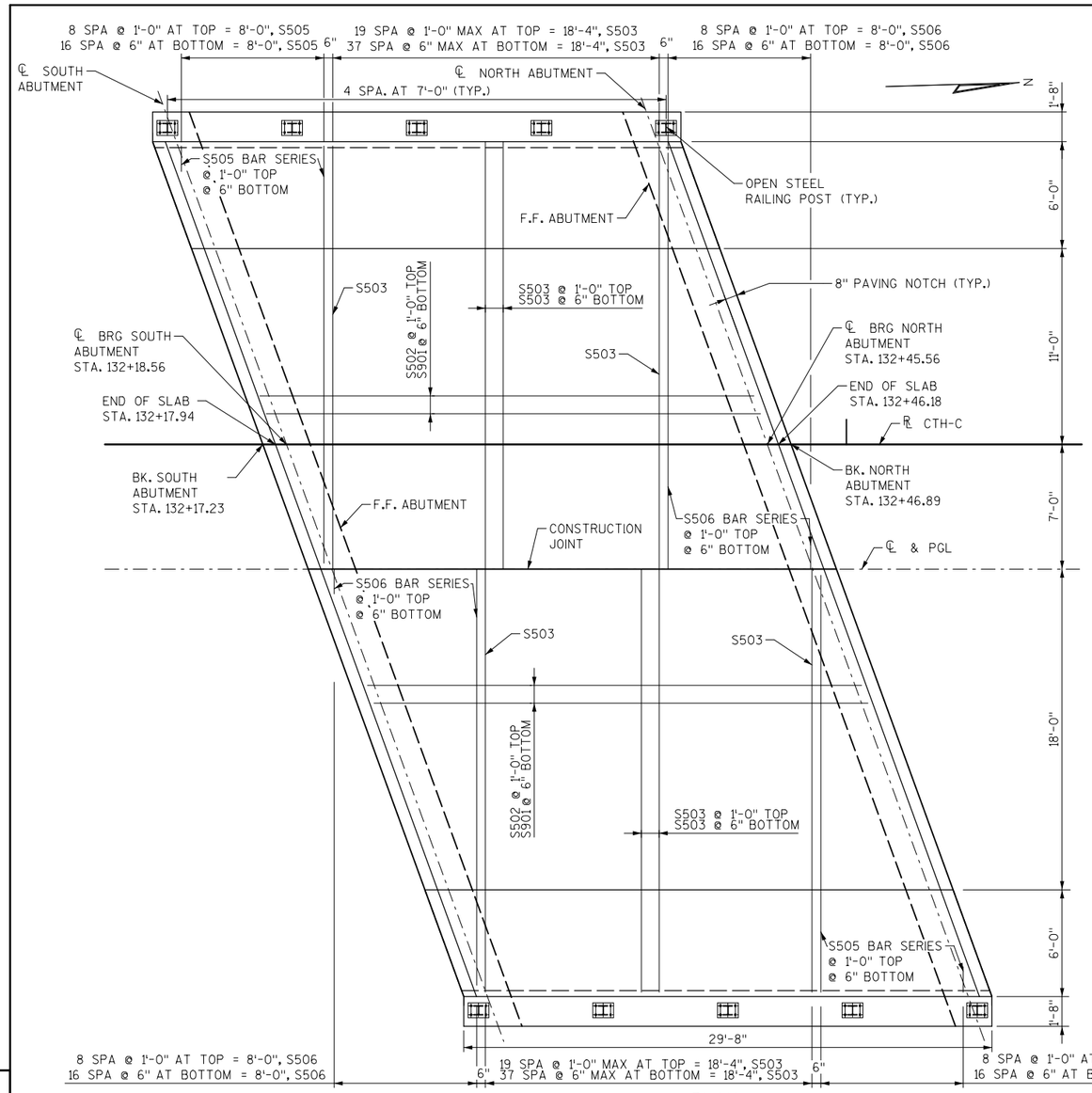

PLAN

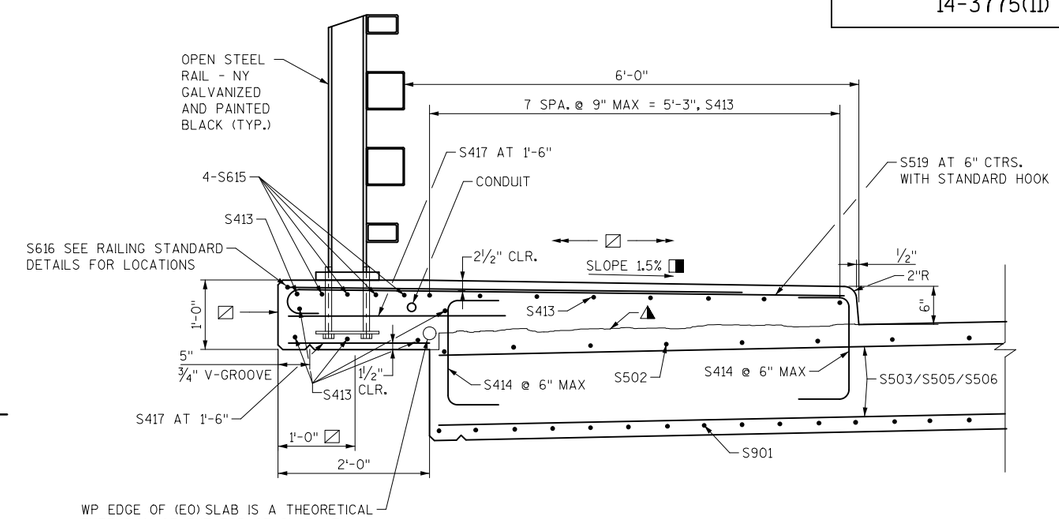

SECTION THROUGH SIDEWALK

▲ CONST. JOINT- STRIKE OFF AS SHOWN AND LEAVE ROUGH. MATCH BRIDGE X-SLOPE. FORM EDGE FOR SIDEWALK OVERHANG AS SHOWN WITH A 1 1/2" HORIZONTAL NOTCH.

◨ +/- 0.5% CONSTRUCTION TOLERANCE IN SIDEWALK CROSS SLOPE. THE SIDEWALK CROSS SLOPE SHALL NOT EXCEED 2% WITHOUT PRIOR APPROVAL OF THE ENGINEER.

◪ COAT WITH "PROTECTIVE SURFACE TREATMENT" AS PER THE STANDARD SPECIFICATIONS.

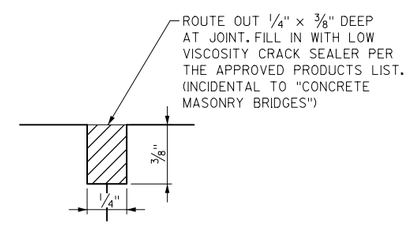

LONGITUDINAL CONSTRUCTION JOINT DETAIL

TOP OF SLAB ELEVATIONS

LOCATION	WP WEST EO SLAB	WEST GUTTER	CROWN	EAST GUTTER	WP EAST EO SLAB
END OF SLAB	889.07	889.16	889.45	889.16	889.03
℄ BRG S ABUT	889.06	889.15	889.44	889.16	889.03
0.1	889.03	889.12	889.42	889.13	889.00
0.2	889.00	889.09	889.39	889.11	888.98
0.3	888.97	889.07	889.36	889.09	888.96
0.4	888.95	889.04	889.34	889.07	888.94
0.5	888.92	889.02	889.32	889.05	888.92
0.6	888.90	888.99	889.30	889.03	888.90
0.7	888.87	888.97	889.27	889.01	888.88
0.8	888.85	888.94	889.25	888.99	888.86
0.9	888.83	888.92	889.23	888.97	888.85
℄ BRG N ABUT	888.80	888.90	889.22	888.96	888.83
END OF SLAB	888.80	888.90	889.21	888.95	888.83

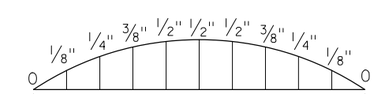

CAMBER DIAGRAM

CAMBER SPANS AS SHOWN TO PROVIDE FOR DEADLOAD DEFLECTION & FUTURE CREEP. CAMBER DOES NOT INCLUDE ALLOWANCE FOR FORM SETTLEMENT.

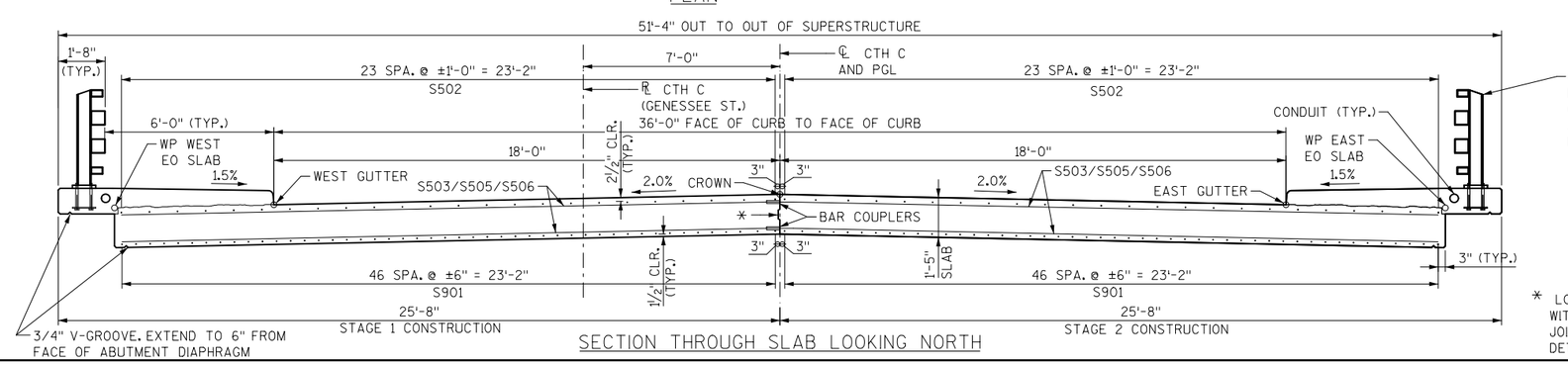

SECTION THROUGH SLAB LOOKING NORTH

OPEN STEEL RAIL - NY GALVANIZED AND PAINTED BLACK (TYP.)

* LONGITUDINAL CONSTRUCTION JOINT WITH KEYWAY. SEE "LONGIT. CONSTRUCTION JOINT" DETAIL ON "SUPERSTRUCTURE DETAILS" SHEET.

NO.	DATE	REVISION	BY

STRUCTURE B-67-358

DRAWN BY MHH | PLANS CK'D. SJD

SUPERSTRUCTURE PLAN

SHEET 8 OF 11

FILE= 081080_SUPER.DGN
SCALE = 1:8.00002

8

8

PROJECT NUMBER
14-3775(11)

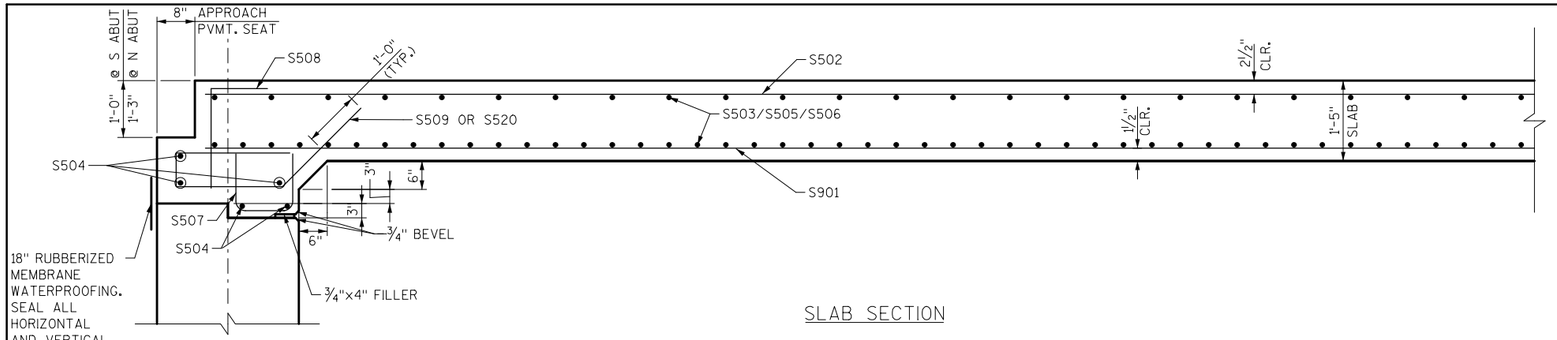

SLAB SECTION

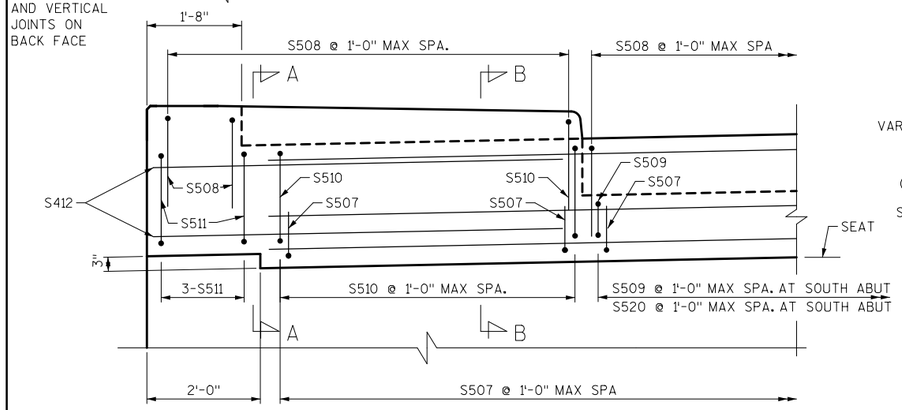

PARTIAL CROSS SECTION AT ABUTMENT

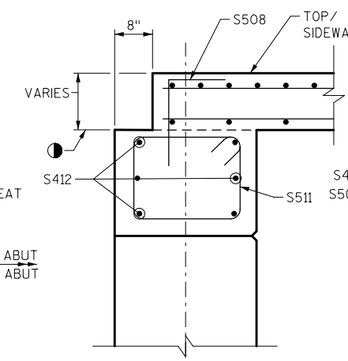

SECTION A-A

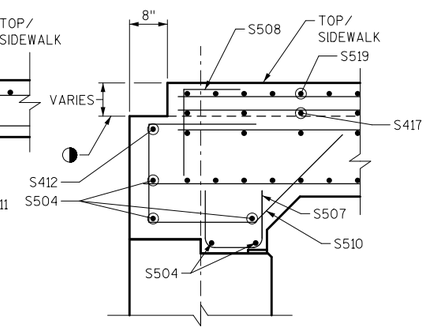

SECTION B-B

◑ BOTTOM OF SIDEWALK PAVING NOTCH IS THE TOP OF SLAB POUR EXTENDED

⚠ LENGTH SHOWN FOR BAR SERIES IS AN AVERAGE LENGTH AND SHOULD ONLY BE USED FOR BAR WEIGHT CALCULATIONS.

BILL OF BARS

BAR NO.	COATED BAR	NO. REQ'D	LENGTH	BENT BAR	BUNDLED	⚠ BAR SERIES	18780 # COATED 0 # UNCOATED LOCATION
S901	X	94	28'-0"				SLAB LONGITUDINAL BOTTOM
S502	X	48	28'-0"				SLAB LONGITUDINAL TOP
S503	X	116	23'-5"				SLAB TRANSVERSE
S504	X	10	24'-11"				SLAB TRANSVERSE AT ABUTMENT
S505	X	52	7'-11"			X	SLAB TRANSVERSE - CUT BARS
S506	X	52	8'-2"			X	SLAB TRANSVERSE - CUT BARS AT SPLICE
S507	X	96	2'-7"	X			SLAB AT ABUTMENT HAUNCH
S508	X	112	3'-8"	X			SLAB AT APPROACH NOTCH
S509	X	38	6'-7"	X			SLAB AT SOUTH ABUTMENT
S510	X	28	7'-7"	X			SLAB AT ABUTMENTS - OUTSIDE
S511	X	12	8'-8"	X			SLAB AT ABUTMENTS - UNDER SIDEWALK
S412	X	24	7'-4"				SLAB TRANSVERSE AT ABUTMENT - OUTSIDE
S413	X	28	29'-4"				SIDEWALK LONGITUDINAL
S414	X	240	3'-4"	X			SIDEWALK DOWELS
S615	X	8	29'-4"				SIDEWALK LONGITUDINAL AT NY RAIL
S616	X	20	12'-0"	X			SIDEWALK TRANSVERSE AT NY RAIL
S417	X	120	3'-0"				SIDEWALK TRANSVERSE AT MIDDLE
S418	X	42	1'-10"				SIDEWALK TRANSVERSE AT BOTTOM
S519	X	120	7'-10"				SIDEWALK TRANSVERSE AT TOP
S520	X	38	6'-5"	X			SLAB AT NORTH ABUTMENT

BAR SERIES TABLE

BAR NO.	NUMBER REQUIRED	LENGTH
S505	2 SERIES OF 9 @ TOP 2 SERIES OF 17 @ BOTTOM	1'-1" TO 23'-1"
S506	2 SERIES OF 9 @ TOP 2 SERIES OF 17 @ BOTTOM	1'-4" TO 23'-4"

FF DENOTES FRONT FACE
BF DENOTES BACK FACE

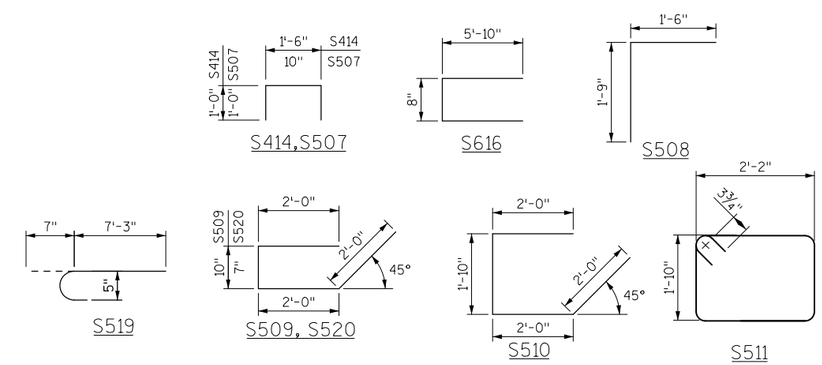

NO.	DATE	REVISION	BY

STRUCTURE B-67-358

DRAWN BY SCD | PLANS CK'D. SJD

SUPERSTRUCTURE DETAILS

SHEET 9 OF 11

FILE= 081090_SUPDET.DGN
SCALE = 1:2.66667

8

8

PROJECT NUMBER
14-3775(11)

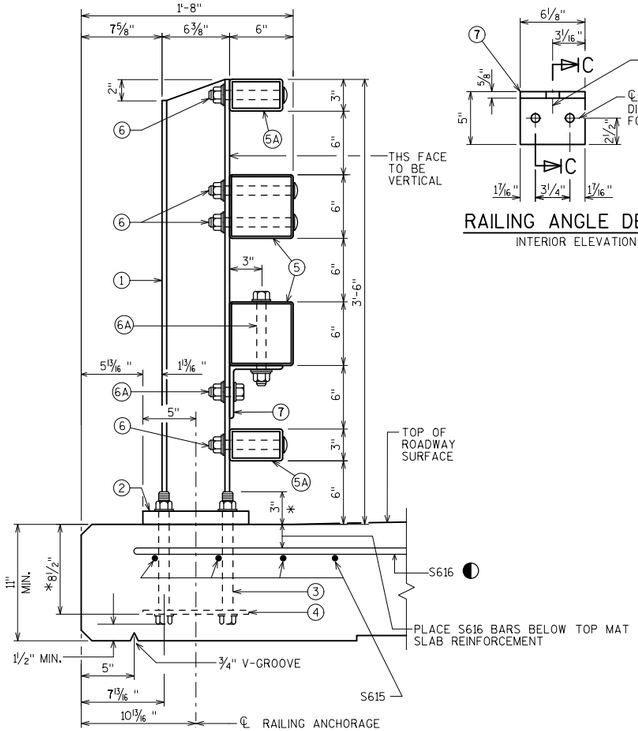

SECTION THRU RAILING ON DECK

*NORMAL TO BASE PLATE

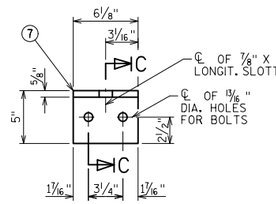

RAILING ANGLE DETAIL

INTERIOR ELEVATION

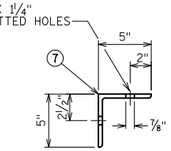

SECTION C-C

ANGLE SECTION

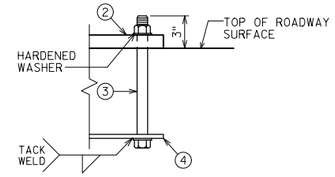

ANCHOR BOLTS

FOR ANCHOR BOLTS IN WINGS, TACK WELD MAY BE USED IN FIELD AFTER ANCHOR PLATE IS IN POSITION IF REQ'D. FOR CONSTRUCTIBILITY.

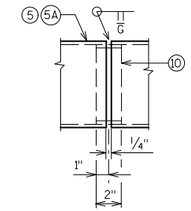

SHOP RAIL SPLICE DETAIL

(LOCATION MUST BE SHOWN ON SHOP DRAWINGS)

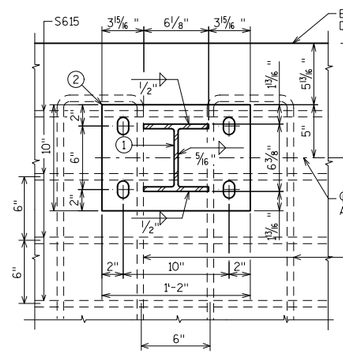

SECTION A-A

BASE PLATE DETAIL

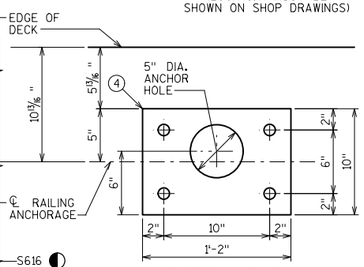

SECTION B-B

ANCHOR PLATE DETAIL

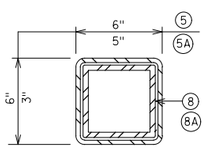

SECTION D-D

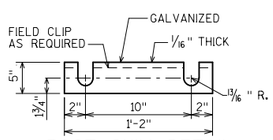

POST SHIM DETAIL

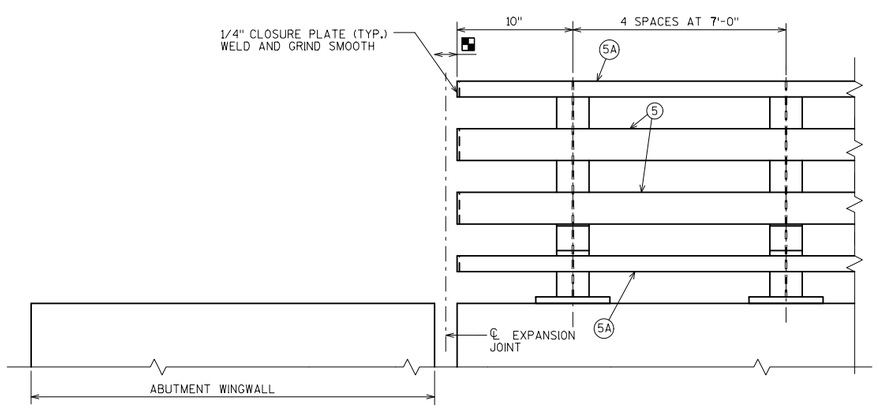

PART ELEVATION OF RAILING

INTERIOR ELEVATION

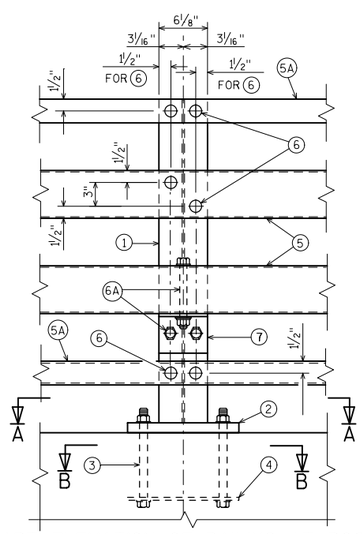

PART ELEVATION OF RAILING AT POST

INTERIOR ELEVATION

LEGEND

1. W6 X 25 WITH 1⅛" X 1³⁄₁₆" HORIZONTAL SLOTTED HOLES ON EACH SIDE OF POST FOR BOLT NO. 6 AT TOP TWO RAILS. USE 1" DIA. HOLES FOR BOLTS NO. 6 AT BOTTOM NO. 5A & FOR BOLT NO. 6A AT NO. 7. CUT BOTTOM OF POST TO MATCH CROSS SLOPE OF ROADWAY. PLACE POST VERTICAL. PLACE POSTS NORMAL TO GRADE LINE.
2. PLATE 1¼" X 10" X 1'-2" WITH 1⅛" X 1⁷⁄₁₆" SLOTTED HOLES FOR ANCHOR BOLTS NO. 3. WELD TO NO. 1 AS SHOWN. SLOTS PARALLEL TO SHORT SIDE OF PLATE.
3. ASTM A449 - 1" DIA. ANCHOR BOLTS WITH HEAVY HEX NUT AND 2" O.D. HARDENED WASHER (ALL GALVANIZED). 4 REQUIRED PER POST. THREAD 3" AND PLACE NORMAL TO PLATE NO. 2. CHAMFER TOP OF BOLTS BEFORE THREADING. USE 11½" LONG BOLT FOR CONCRETE DECKS. ON CONCRETE SLAB SUPERSTRUCTURES, USE 1'-3" LONG BOLT FOR SLAB THICKNESS > 16" AND 11½" LONG FOR THICKNESS ≤ 16". USE 1'-9" LONG IN ABUTMENT WINGS. (AN EQUIVALENT THREADED ROD WITH HEAVY HEX NUTS AND HARDENED WASHERS MAY BE SUBSTITUTED FOR ANCHOR BOLTS IN WINGS IF REQUIRED FOR CONSTRUCTABILITY.)
4. ⅜" X 10" X 1'-2" ANCHOR PLATE (GALVANIZED) WITH 1⁷⁄₁₆" DIA. HOLES FOR ANCHOR BOLTS NO. 3.
5. TS 6 X 6 X ³⁄₁₆" STRUCTURAL TUBING. USE 1" DIA. HOLES FOR BOLT NO. 6 (FRONT & BACK) & ⅞" DIA. HOLES FOR BOLT NO. 6A (TOP & BOTTOM).

5A. TS 5 X 3 X ¼" STRUCTURAL TUBING. USE 1" DIA. HOLES FOR BOLT NO. 6. IN TOP RAIL (FRONT & BACK). USE 1⅛" X 1⅜" HORIZONTAL SLOTTED HOLES FOR BOLT NO. 6 IN BOTTOM RAIL (FRONT & BACK) AND A 2" O.D. WASHER UNDER BOLT HEAD.

6. ⅞" DIA. A325 SLOTTED ROUND HEAD BOLT WITH HEX NUT, ³⁄₁₆" X 1¾" X 1¾" WASHER, AND SPRING LOCK WASHER (2 REQUIRED AT RAIL TO POST LOCATIONS SHOWN).

6A. ¾" DIA. A325 BOLT WITH HEX NUT AND SPRING LOCK WASHER (1 REQUIRED AT RAIL TO ANGLE AND 2 REQUIRED AT ANGLE TO POST LOCATIONS SHOWN WITH ³⁄₁₆" X 1¾" X 1¾" WASHER).

7. L 5 X 5 X ⅝" STRUCTURAL ANGLE. ATTACH TO NO. 1 AND NO. 5 AS SHOWN.
8. TS 5 X 5 X ⁵⁄₁₆" X 2'-4" LONG SPLICE TUBE. 1 PER RAIL. USED IN NO. 5.

8A. 4¼" X 2⅛" X 2'-4" LONG SPLICE BAR. 1 PER RAIL. USED IN NO. 5A.

9. ¾" DIA. A325 FULLY THREADED BOLTS, 7½" LONG, WITH 2 WASHERS AND HEAVY HEX NUT ON EACH BOLT. NUT TO BE FINGER TIGHT. (4 REQUIRED PER SPLICE). USE 1" X 4" SLOTTED HOLES IN TOP AND BOTTOM OF NO. 5.

9A. ¾" DIA. A325 FULLY THREADED BOLTS, 4½" LONG, WITH 2 WASHERS AND HEAVY HEX NUT ON EACH BOLT. NUT TO BE FINGER TIGHT. (4 REQUIRED PER SPLICE). USE 1" X 4" SLOTTED HOLES IN TOP AND BOTTOM OF NO. 5A.

10. SPLICE SLEEVE FABRICATED FROM ¼" PLATE. PROVIDE "SLIDING FIT".

■ ROADWAY OPENING OR 1" MIN.

▲ PROTRUSIONS CAUSED BY WELDING OR GALVANIZING ARE NOT PERMITTED ON THE ADJOINING SURFACES OF THE RAILS, SPLICE TUBES AND FILL PLATES.

◐ #6 BARS X 12'-0" LONG. BEND AS SHOWN. TIE TO TOP MAT OF STEEL.

NOTES

BID ITEM SHALL BE "RAILING TUBULAR TYPE NY4 GALVANIZED B-67-358", WHICH INCLUDES ALL ITEMS SHOWN.

RAILING SHALL BE CONTINUOUS OVER A MINIMUM OF THREE (3) POSTS WITHOUT SPLICES WHERE POSSIBLE.

POST BASE PLATES SHALL BE FLAT WITH ALL SURFACES SMOOTH AND FREE FROM WARP AND ALL EDGES SMOOTH, STRAIGHT, AND VERTICAL. ALL PLATE CUTS SHALL BE MACHINE OR MACHINE FLAME CUT.

ALL MATERIAL SHALL BE GALVANIZED AFTER FABRICATION. PRIOR TO GALVANIZING, ALL STEEL RAILING POSTS, ANGLES, SPLICE TUBES, SPLICE BARS AND STEEL TUBING SHALL BE GIVEN A NO. 6 BLAST CLEANING PER SSPC SPECIFICATIONS.

RAIL POST, BASE PLATES, SPLICE BAR, ANGLES AND SPLICE PLATES SHALL CONFORM TO THE REQUIREMENTS OF ASTM A709 GRADE 50. STRUCTURAL TUBING SHALL CONFORM TO THE REQUIREMENTS OF ASTM A500 GRADE B OR C WITH A CERTIFIED f_y =50 KSI. ANCHOR PLATES & SHIMS SHALL CONFORM TO THE REQUIREMENTS OF ASTM A709 GRADE 36.

THE NUT SECURING THE POST BASE PLATE TO THE CONCRETE SHALL BE TIGHTENED TO A SNUG FIT AND GIVEN AN ADDITIONAL ⅛ TURN.

FILL BOLT SLOT OPENINGS IN POST SHIMS AND PLATE NO. 2 WITH NON-STAINING GRAY NON-BITUMINOUS JOINT SEALER. CAULK AROUND PERIMETER OF NO. 2 WITH NON-STAINING GRAY NON-BITUMINOUS JOINT SEALER.

STEEL SHIMS SHALL BE PROVIDED & USED UNDER PLATE NO. 2 WHERE REQUIRED FOR ALIGNMENT, AND SHALL BE GALVANIZED.

PLACE FIRST BOTTOM LONGITUDINAL REINFORCING BAR CLEAR OF DRIP GROOVE.

THIS RAILING MEETS NCHRP REPORT 350 EVALUATION CRITERIA FOR TEST LEVEL 4 (TL-4).

PAINT OVER GALVANIZING, ALL MATERIAL EXCEPT ANCHORAGE DETAIL (NO. 3 & NO. 4), WITH AN APPROVED TIE COAT AND TOP COAT AS SPECIFIED IN THE SPECIAL PROVISIONS. THE RAILING SHALL BE PAINTED FEDERAL COLOR NO. 17038 "BLACK."

NO.	DATE	REVISION	BY

STRUCTURE B-67-358

DRAWN BY MHH | PLANS CK'D. SJD

TUBULAR STEEL RAILING TYPE NY4

SHEET 10 OF 11

141

FILE= 081100_NY4RAIL.DGN
SCALE = 1:2.38372

RAILNY4
1-15

8

8

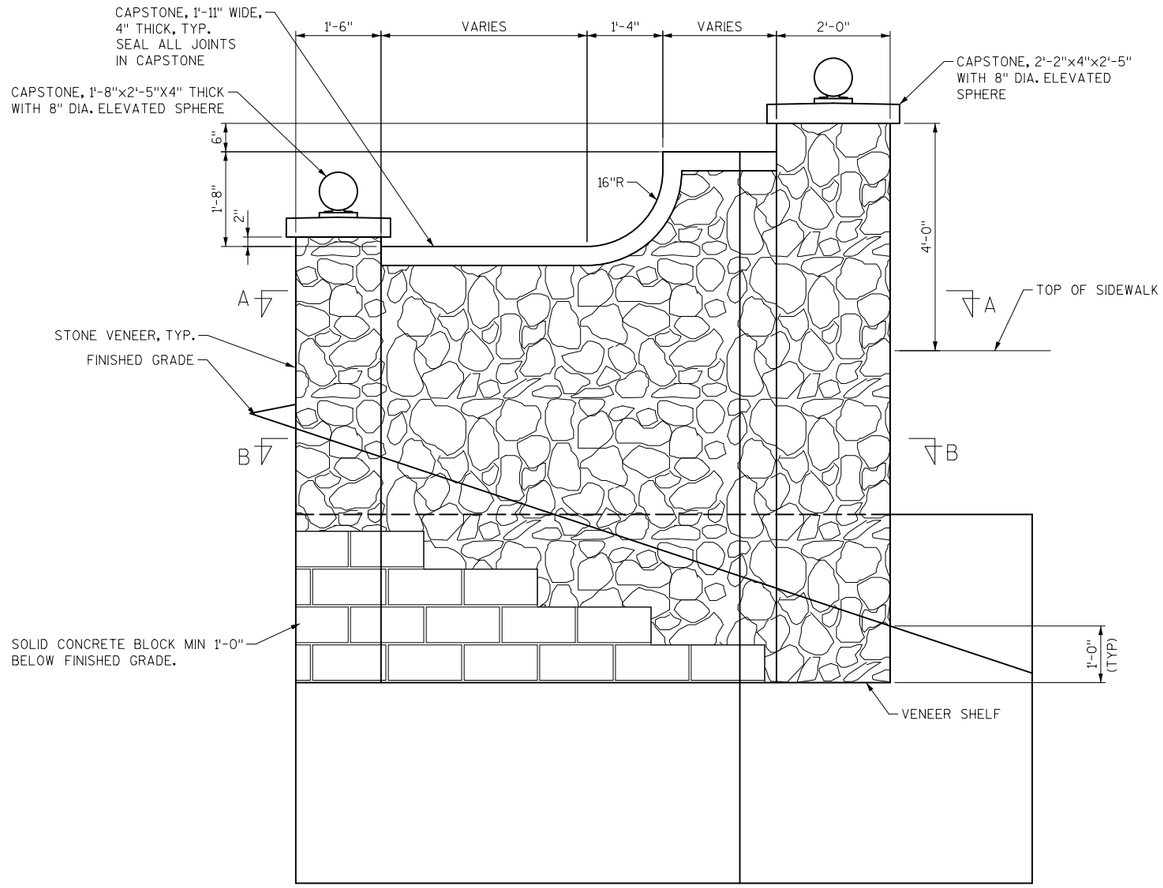

TYPICAL WINGWALL ELEVATION (ARCHITECTURAL DETAILS)

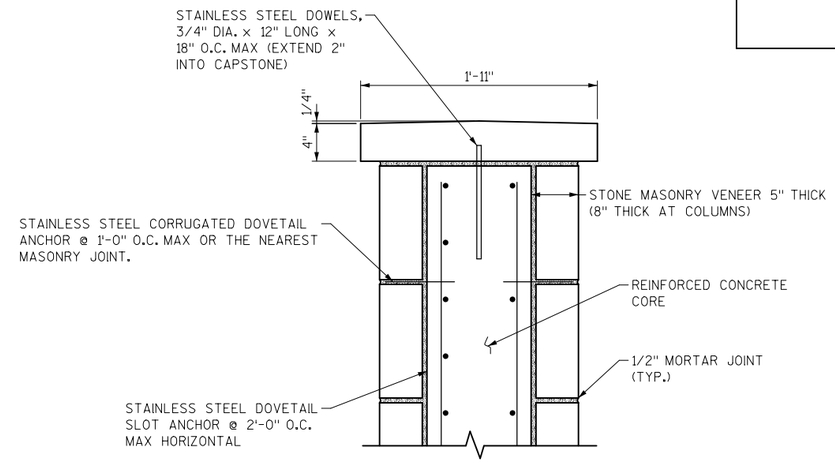

VENEER ATTACHMENT DETAILS

NOTES:

MINIMIZE THE USE OF JOINTS IN CAPSTONES.

SEAL ALL JOINTS IN CAPSTONES USING NON BITUMINOUS JOINT SEALER. MATCH COLOR OF SEALER TO COLOR OF STONE.

SOLID CONCRETE BLOCK MAY BE USED IN LIEU OF FIELD STONE A MINIMUM OF 12" BELOW FINISHED GRADE.

CONCRETE BRICK SHALL MEET THE REQUIREMENTS OF ASTM C-90 WITH NORMAL WEIGHT AGGREGATE AND BE SUITABLE FOR EXPOSED OUTDOOR USE.

MORTAR SHALL BE RESISTANT TO SALT DAMAGE AND DEGRADATION.

SEAL JOINT BETWEEN EDGE OF SIDEWALK AND INSIDE OF WINGWALL WITH NON-BITUMINOUS JOINT FILLER.

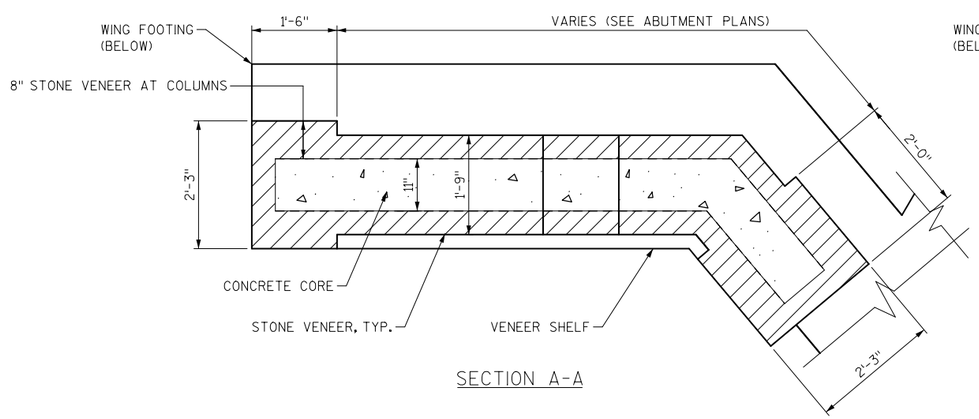

SECTION A-A

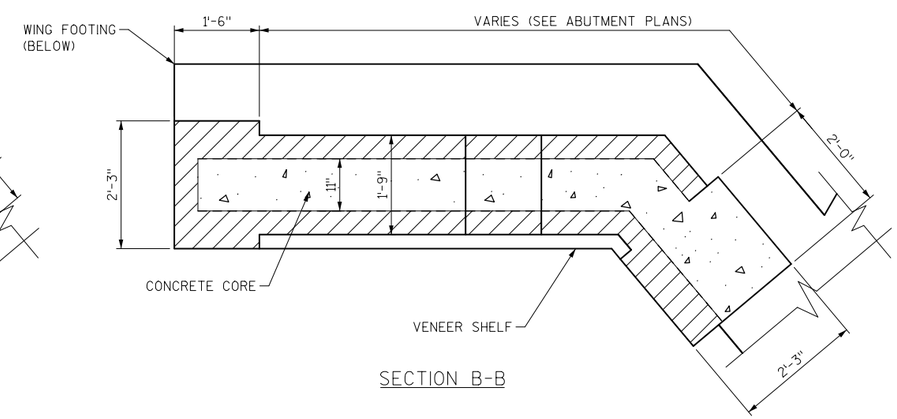

SECTION B-B

8

8

PROJECT NUMBER
14-3775(11)

NO.	DATE	REVISION	BY

STRUCTURE B-67-358

DRAWN BY MHH | PLANS CK'D. SJD

MASONRY DETAILS

SHEET 11 OF 11

FILE= 081110_MASON.DGN
SCALE = 1:2.66667

GENESEE STREET (CTH C)

STATION	Distance	AREA (SF) Cut	AREA (SF) Salvaged/Unusable Pavement Material	AREA (SF) Fill	Incremental Vol (CY) (Unadjusted) Cut Note 1	Incremental Vol (CY) (Unadjusted) Salvaged/Unusable Pavement Material Note 2	Incremental Vol (CY) (Unadjusted) Fill Note 3	Cumulative Vol (CY) Cut 1.00 Note 1	Cumulative Vol (CY) Expanded Fill 1.30
130+55		0	0	0	0	0	0	0	0
131+00	45	61	0	124	103	0	208	103	270
131+50	50	63	0	38	115	0	150	218	465
132+00	50	59	0	50	113	0	81	331	570
132+50	50	58	0	30	108	0	74	439	667
132+78	28	50	0	2	56	0	17	495	689
133+00	22	122	0	32	62	0	18	558	690
133+50	50	133	0	28	236	0	56	794	763
134+00	50	118	0	27	232	0	51	1026	828
134+50	50	152	0	12	249	0	36	1275	875
135+00	50	47	0	47	183	0	54	1459	945
135+50	50	43	0	33	83	0	74	1541	1041
136+00	50	8	0	47	47	0	74	1588	1137
136+50	50	8	0	25	15	0	67	1603	1224
137+00	50	5	0	36	12	0	56	1615	1297
137+50	50	11	0	0	15	0	33	1630	1340
138+00	50	22	0	11	30	0	10	1659	1353
138+50	50	27	0	9	45	0	18	1704	1376
139+00	50	9	0	11	33	0	19	1737	1401
139+50	50	4	0	26	13	0	35	1750	1446
140+00	50	4	0	52	8	0	72	1758	1540
140+50	50	15	0	3	18	0	51	1777	1606
141+00	50	23	0	0	35	0	3	1812	1610
141+50	50	59	0	0	76	0	0	1888	1610
142+00	50	31	0	0	83	0	0	1971	1610
142+50	50	17	0	0	44	0	0	2015	1610
142+74	24	5	0	0	10	0	0	2025	1610
143+00	26	26	0	0	15	0	0	2040	1610
143+50	50	44	0	0	65	0	0	2105	1611
144+00	50	25	0	1	64	0	1	2169	1612
144+50	50	44	0	1	64	0	2	2233	1614
145+00	50	68	0	0	104	0	1	2338	1615
145+50	50	36	0	0	96	0	0	2434	1615
146+00	50	26	0	8	57	0	8	2491	1625
146+11	11	6	0	0	7	0	2	2497	1627
146+50	39	47	0	6	38	0	7	2536	1634
147+00	50	63	0	8	102	0	13	2638	1651
147+50	50	64	0	1	118	0	8	2756	1662
148+00	50	28	0	3	85	0	4	2840	1667
148+50	50	53	0	3	74	0	6	2915	1674
149+00	50	55	0	2	100	0	5	3015	1681
149+16	16	16	0	0	21	0	1	3036	1682
149+50	34	36	0	3	45	0	2	3080	1684
150+00	50	37	0	2	67	0	4	3147	1689
150+50	50	32	0	1	64	0	2	3211	1692
151+00	50	35	0	0	62	0	1	3273	1693
151+50	50	45	0	0	74	0	0	3347	1693
151+89	39	10	0	0	40	0	0	3387	1693
152+00	11	17	0	0	10	0	0	3397	1693
152+50	50	28	0	6	42	0	6	3439	1701
152+71	21	6	0	0	13	0	2	3452	1704
153+00	29	16	0	3	18	0	3	3470	1705
153+50	50	15	0	11	29	0	12	3499	1722
154+00	50	20	0	8	33	0	17	3532	1744
154+22	22	0	0	0	8	0	3	3540	1748
155+07	85	32	0	1	50	0	1	3590	1749
					3590	0	1367	3540	1748

* COMBINED QUANTITY, ADDITIONAL QUANTITIES FOUND ELSEWHERE IN PLANS.

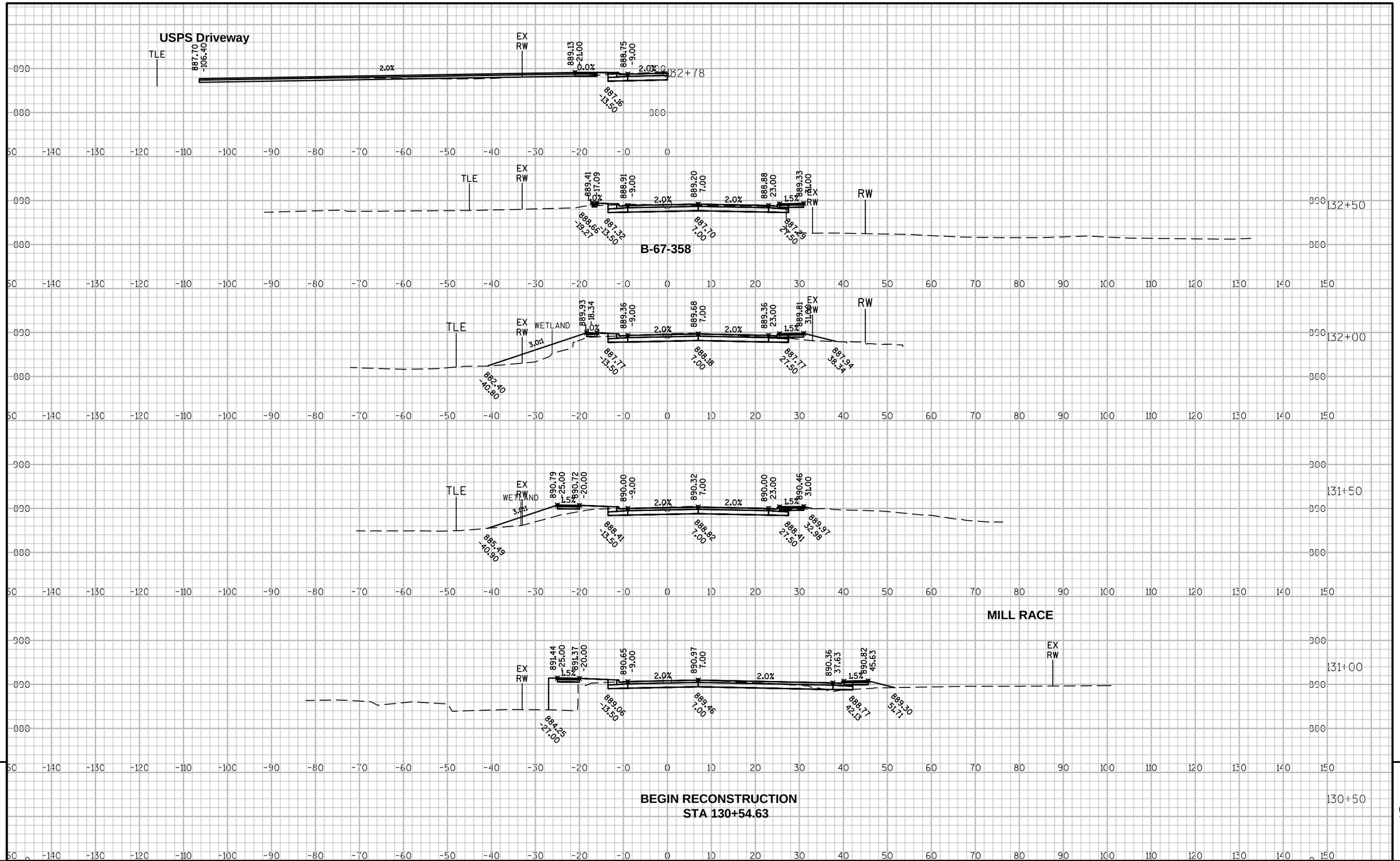

9

9

PROJECT NO: 14-3775(11)	HWY: C.T.H. "C"	COUNTY: WAUKESHA	CROSS SECTIONS: GENESEE STREET	SHEET 144	E

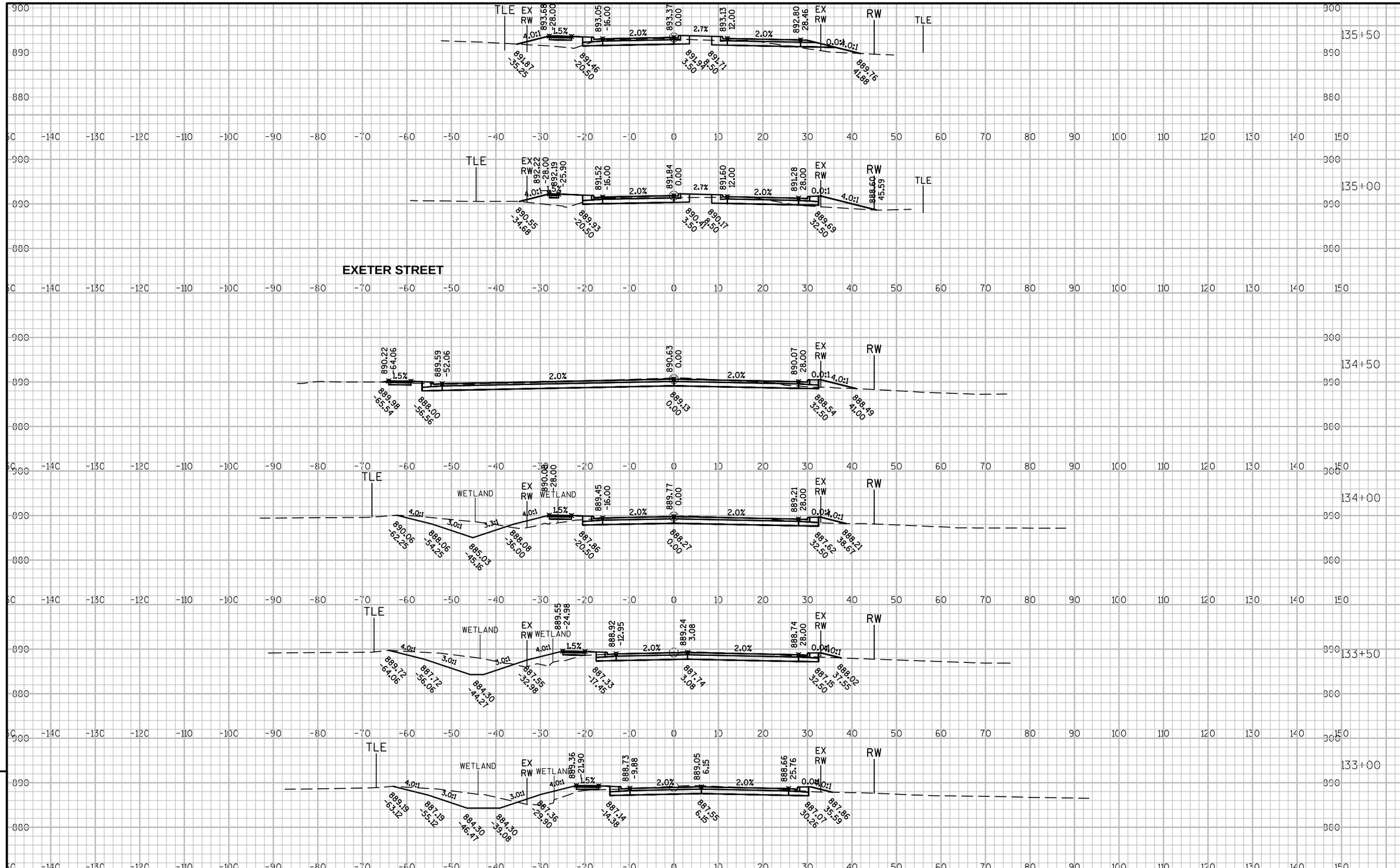

9

9

PROJECT NO: 14-3775(11)	HWY: C.T.H. "C"	COUNTY: WAUKESHA	CROSS SECTIONS: GENESEE STREET	SHEET 145	E

FILE NAME : S:\CAD PROJECTS\409-14 CTH C\SHT\14-3775(11) SHEET CROSS SECTION.DWG PLOT DATE : 11/13/2015 3:27 PM PLOT BY : HMERSON PLOT NAME :

WISDOT/CADDS SHEET 49

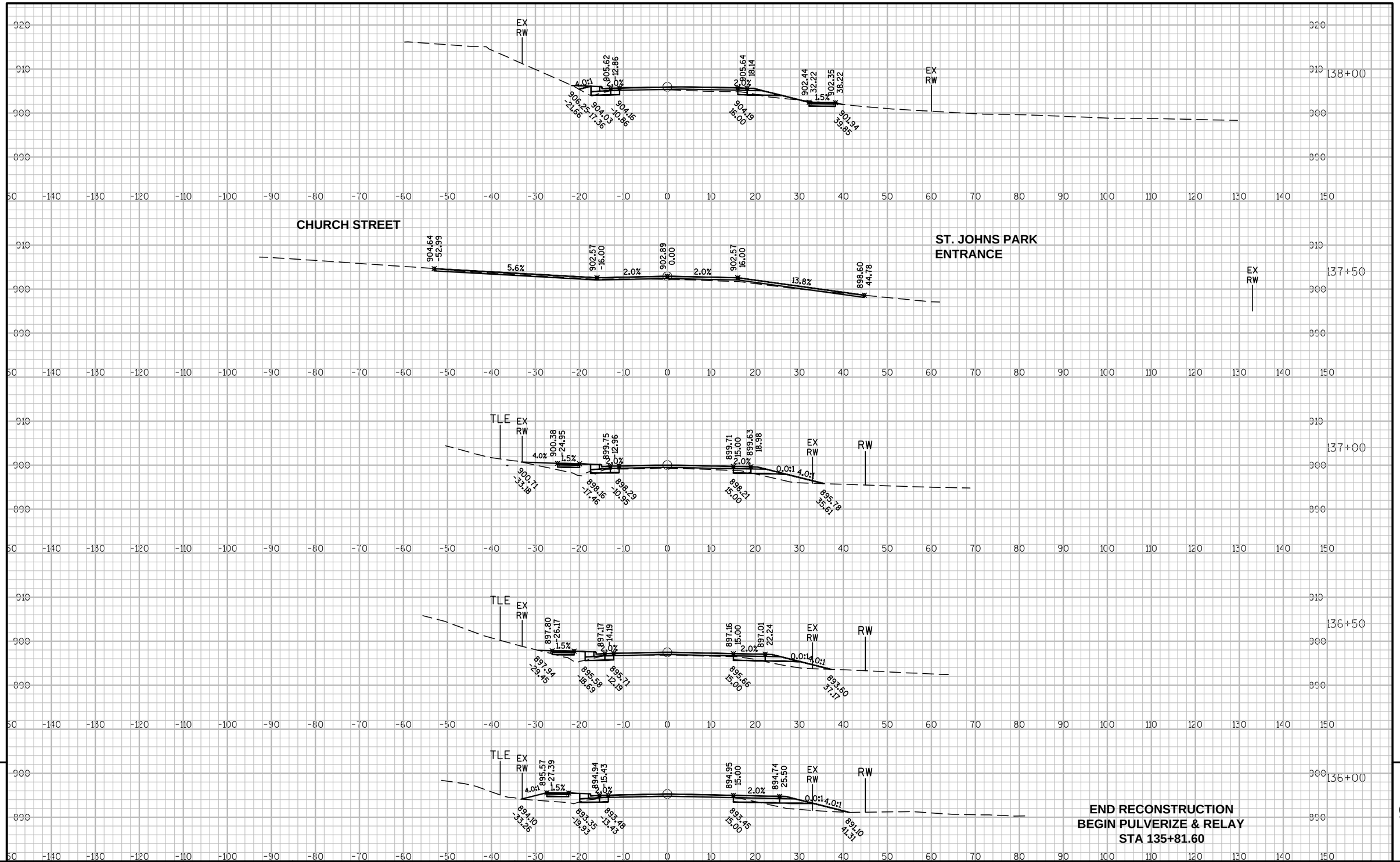

9

9

PROJECT NO: 14-3775(11)	HWY: C.T.H. "C"	COUNTY: WAUKESHA	CROSS SECTIONS: GENESEE STREET	SHEET 146	E

FILE NAME : S:\CAD PROJECTS\409-14 CTH C\SHT\14-3775(11) SHEET CROSS SECTION.DWG PLOT DATE : 11/13/2015 3:27 PM PLOT BY : HMERSON PLOT NAME :

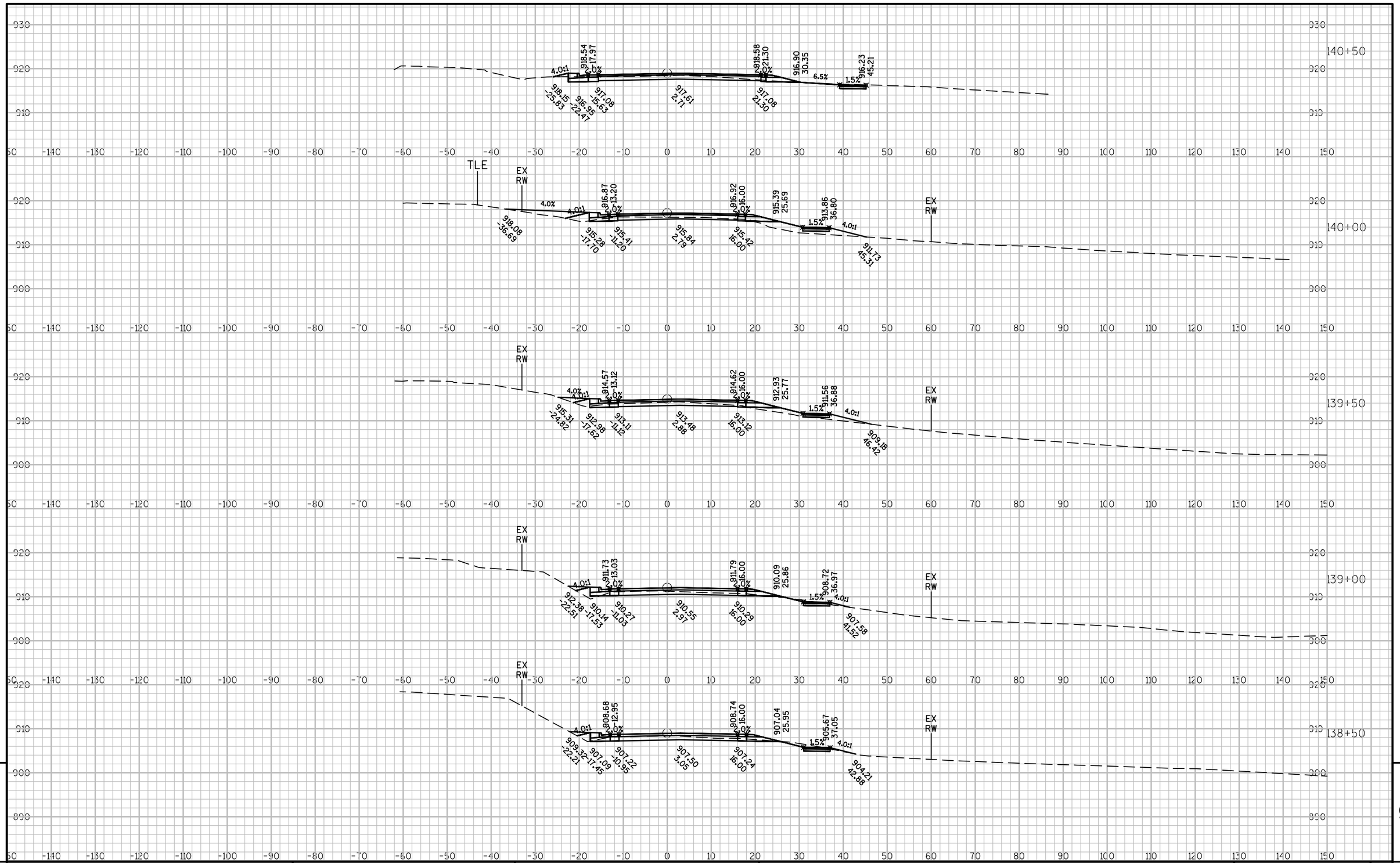

PROJECT NO: 14-3775(11)	HWY: C.T.H. "C"	COUNTY: WAUKESHA	CROSS SECTIONS: GENESEE STREET	SHEET 147	E

FILE NAME : S:\CAD PROJECTS\409-14 CTH C\SHT\14-3775(11) SHEET CROSS SECTION.DWG PLOT DATE : 11/13/2015 3:28 PM PLOT BY : HMERSON PLOT NAME :

WISDOT/CADDS SHEET 49

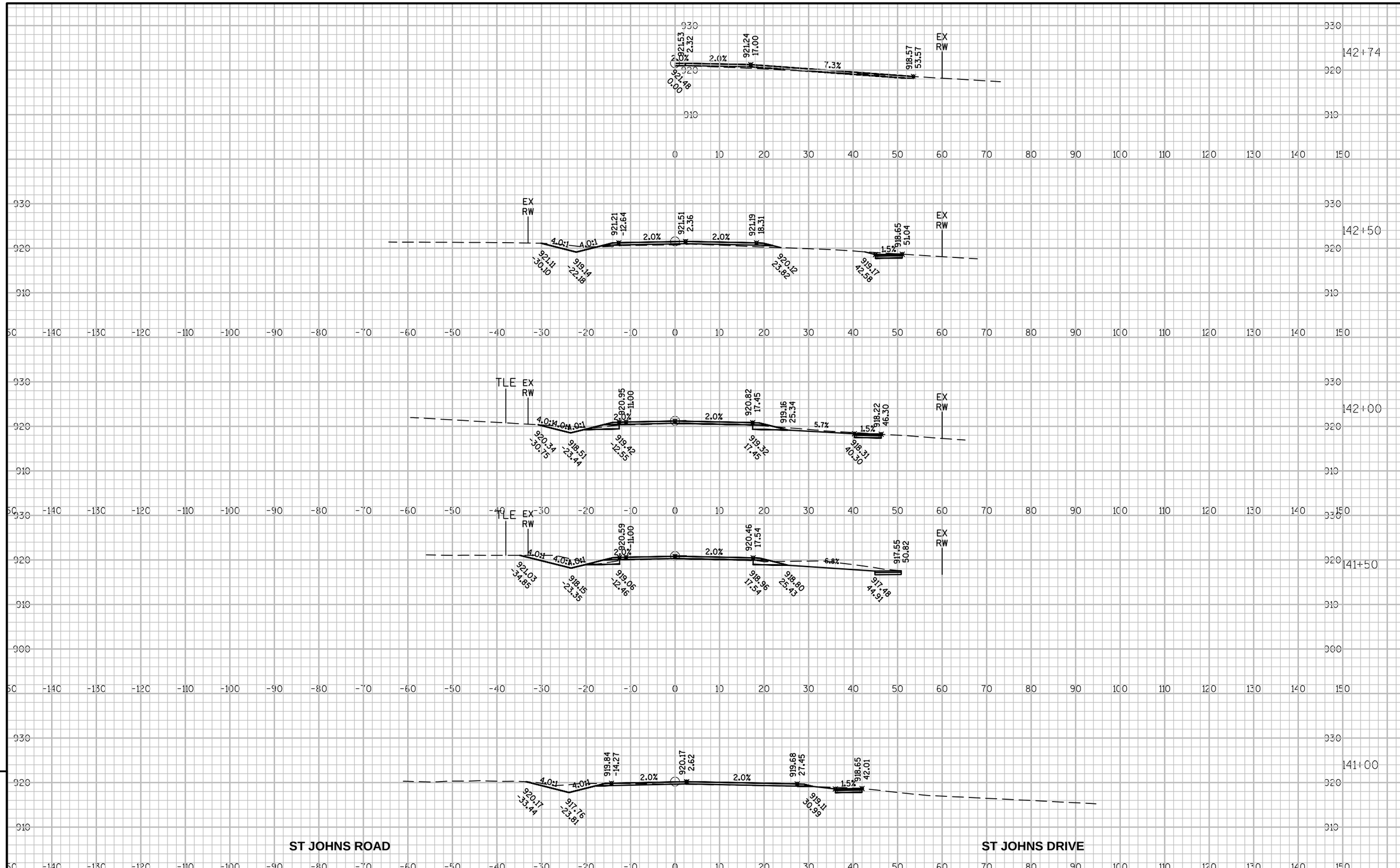

9

9

PROJECT NO: 14-3775(11)	HWY: C.T.H. "C"	COUNTY: WAUKESHA	CROSS SECTIONS: GENESEE STREET	SHEET 148	E

FILE NAME : S:\CAD PROJECTS\409-14 CTH C\SHT\14-3775(11) SHEET CROSS SECTION.DWG PLOT DATE : 11/13/2015 3:28 PM PLOT BY : HMERSON PLOT NAME :

WISDOT/CADDS SHEET 49

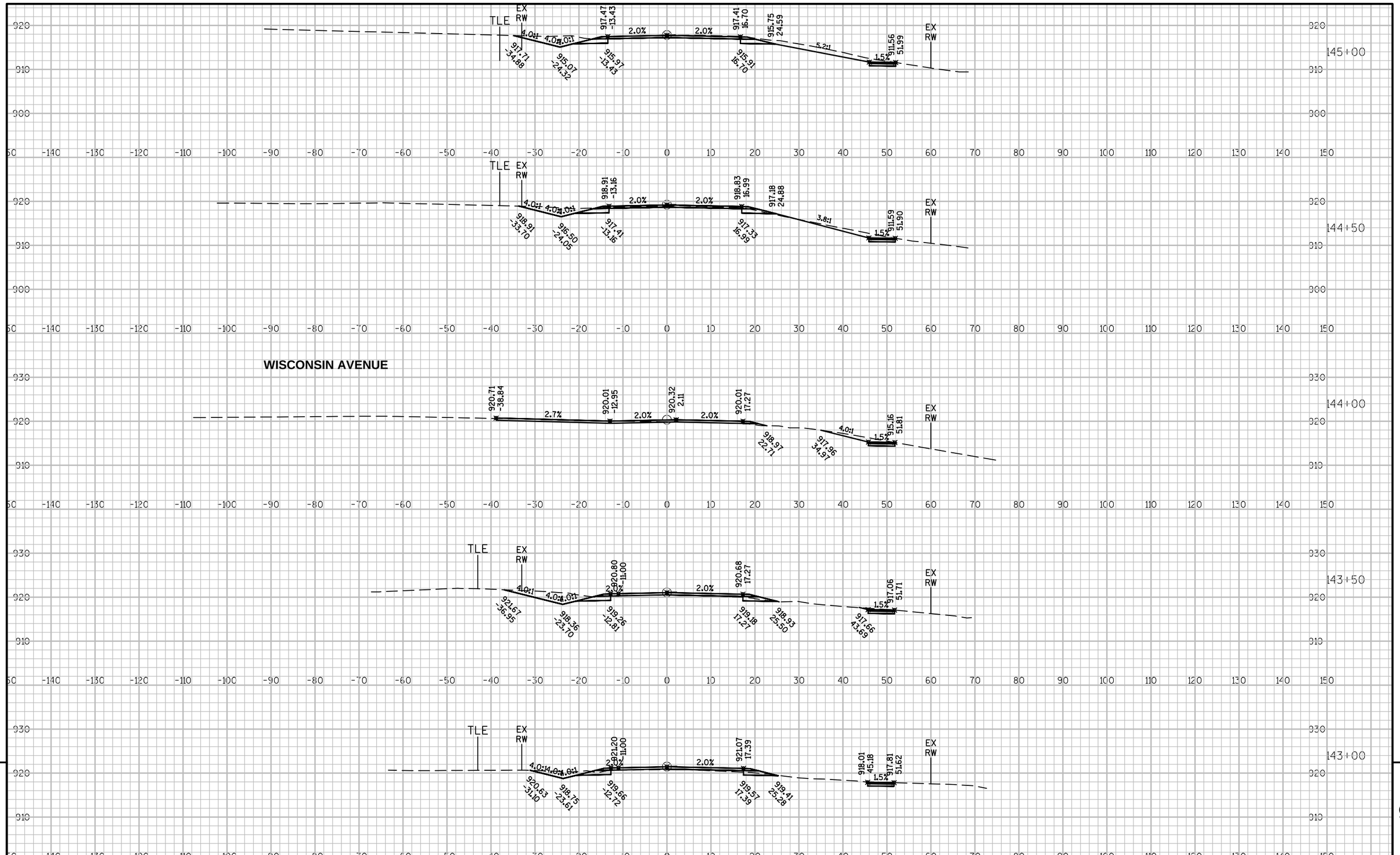

PROJECT NO: 14-3775(11)	HWY: C.T.H. "C"	COUNTY: WAUKESHA	CROSS SECTIONS: GENESEE STREET	SHEET 149	E

FILE NAME : S:\CAD PROJECTS\409-14 CTH C\SHT\14-3775(11) SHEET CROSS SECTION.DWG PLOT DATE : 11/13/2015 3:28 PM PLOT BY : HMERSON PLOT NAME :

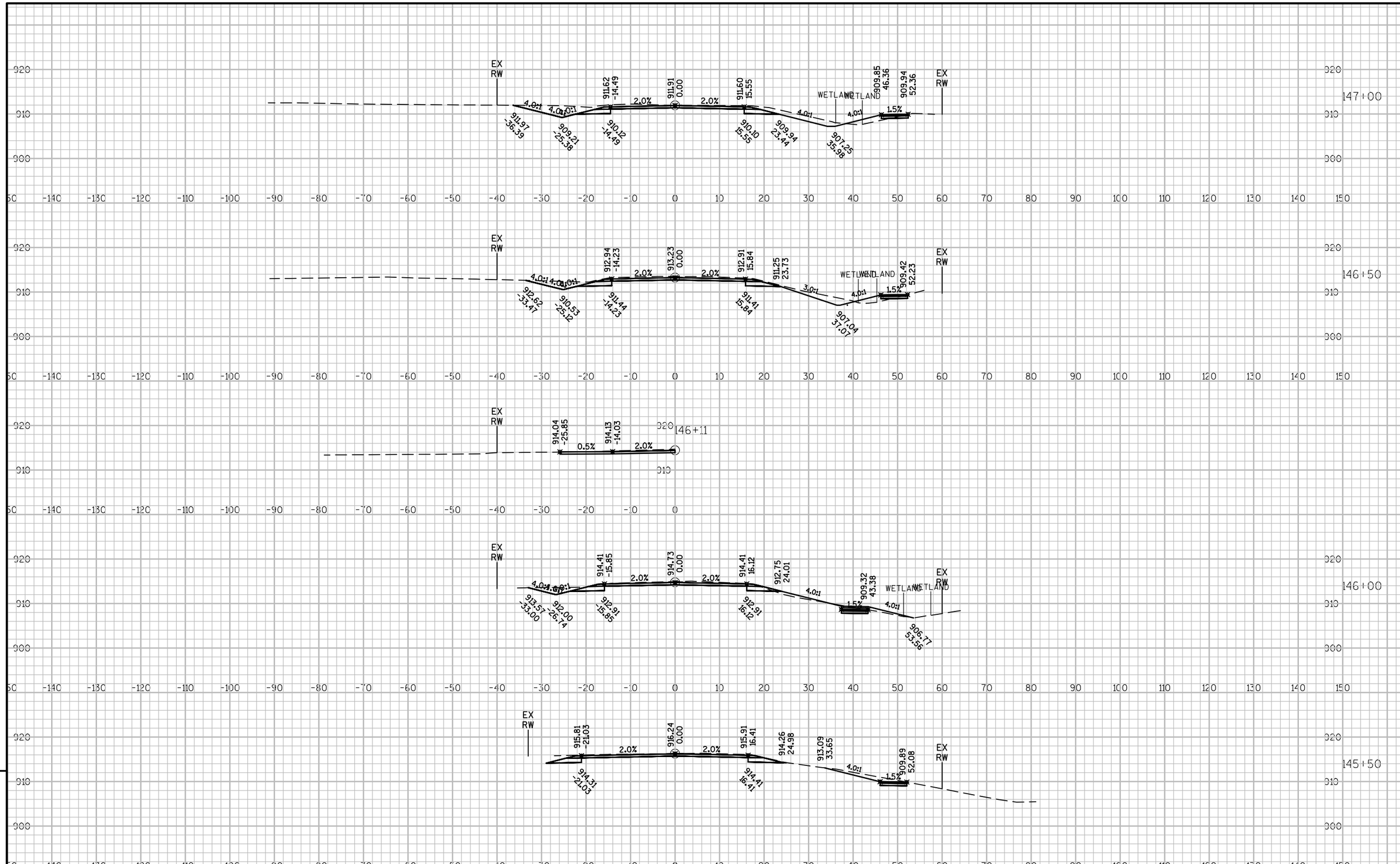

PROJECT NO: 14-3775(11)	HWY: C.T.H. "C"	COUNTY: WAUKESHA	CROSS SECTIONS: GENESEE STREET	SHEET 150	E

FILE NAME : S:\CAD PROJECTS\409-14 CTH C\SHT\14-3775(11) SHEET CROSS SECTION.DWG PLOT DATE : 11/13/2015 3:28 PM PLOT BY : HMERSON PLOT NAME :

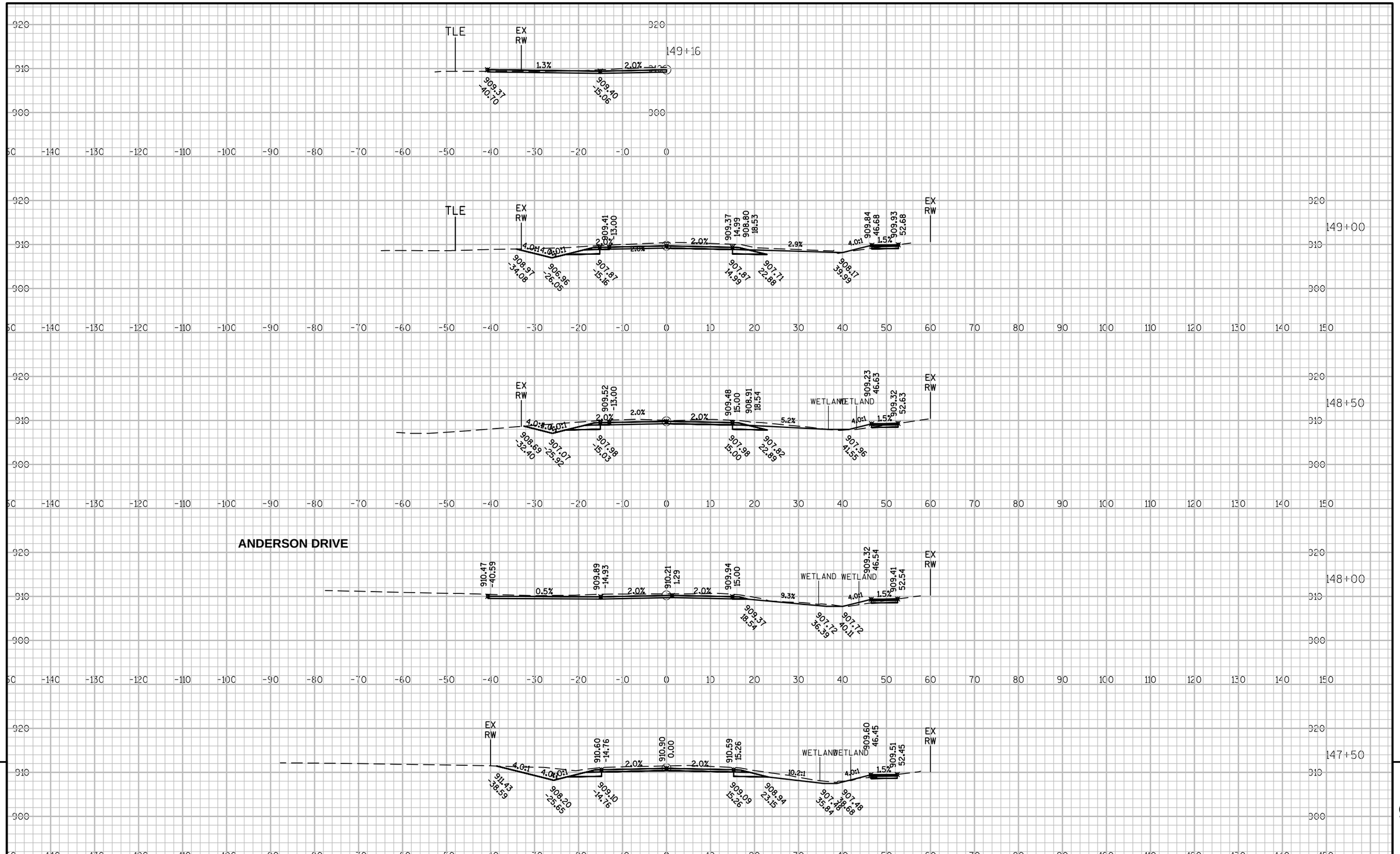

PROJECT NO: 14-3775(11)	HWY: C.T.H. "C"	COUNTY: WAUKESHA	CROSS SECTIONS: GENESEE STREET	SHEET 151	E

FILE NAME : S:\CAD PROJECTS\409-14 CTH C\SHT\14-3775(11) SHEET CROSS SECTION.DWG PLOT DATE : 11/13/2015 3:28 PM PLOT BY : HMERSON PLOT NAME :

WISDOT/CADDS SHEET 49

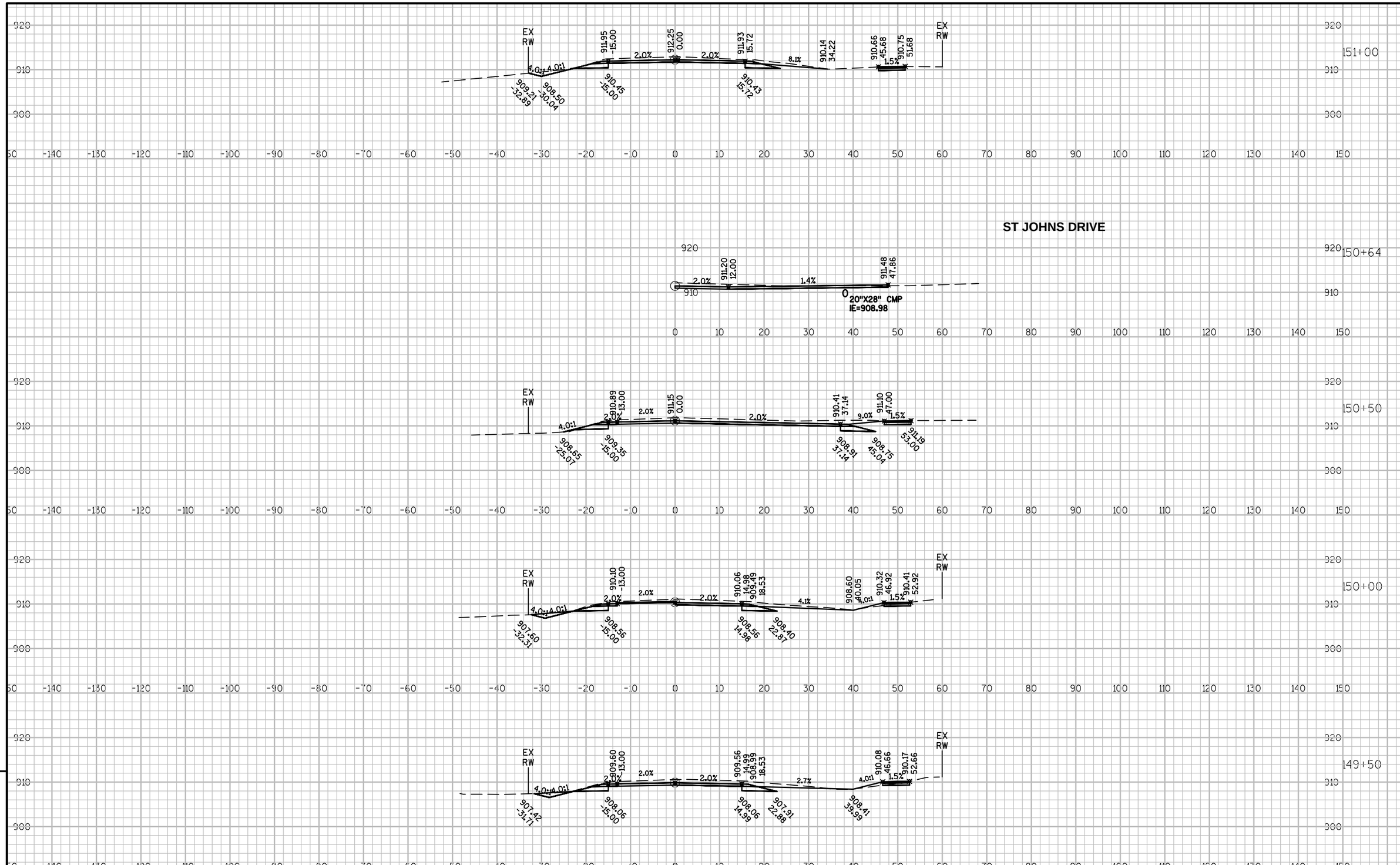

9

9

PROJECT NO: 14-3775(11)	HWY: C.T.H. "C"	COUNTY: WAUKESHA	CROSS SECTIONS: GENESEE STREET	SHEET 152	E

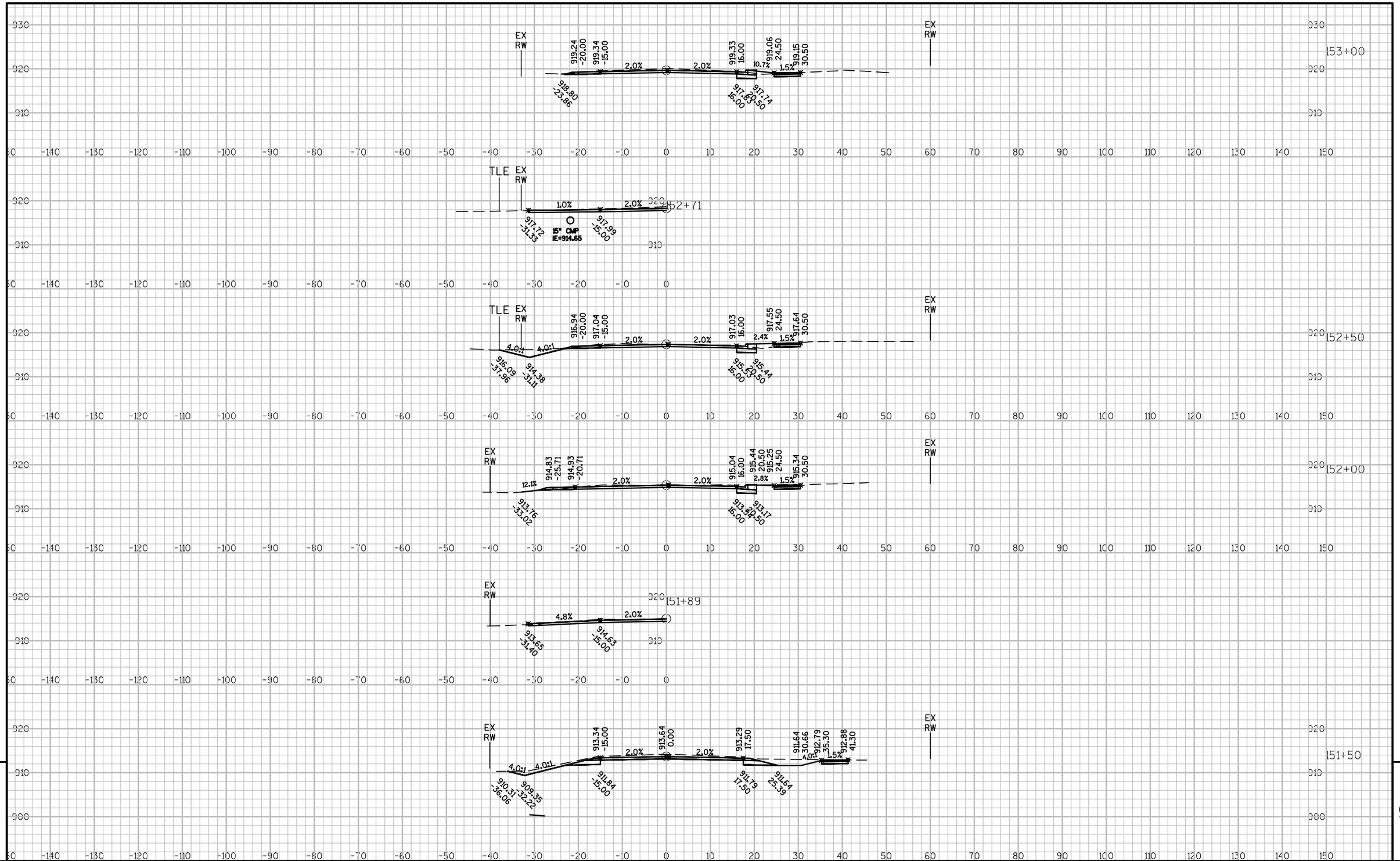

PROJECT NO: 14-3775(11)	HWY: C.T.H. "C"	COUNTY: WAUKESHA	CROSS SECTIONS: GENESEE STREET	SHEET 153	E

FILE NAME : S:\CAD PROJECTS\409-14 CTH C\SHT\14-3775(11) SHEET CROSS SECTION.DWG PLOT DATE : 11/13/2015 3:29 PM PLOT BY : HMERSON PLOT NAME :

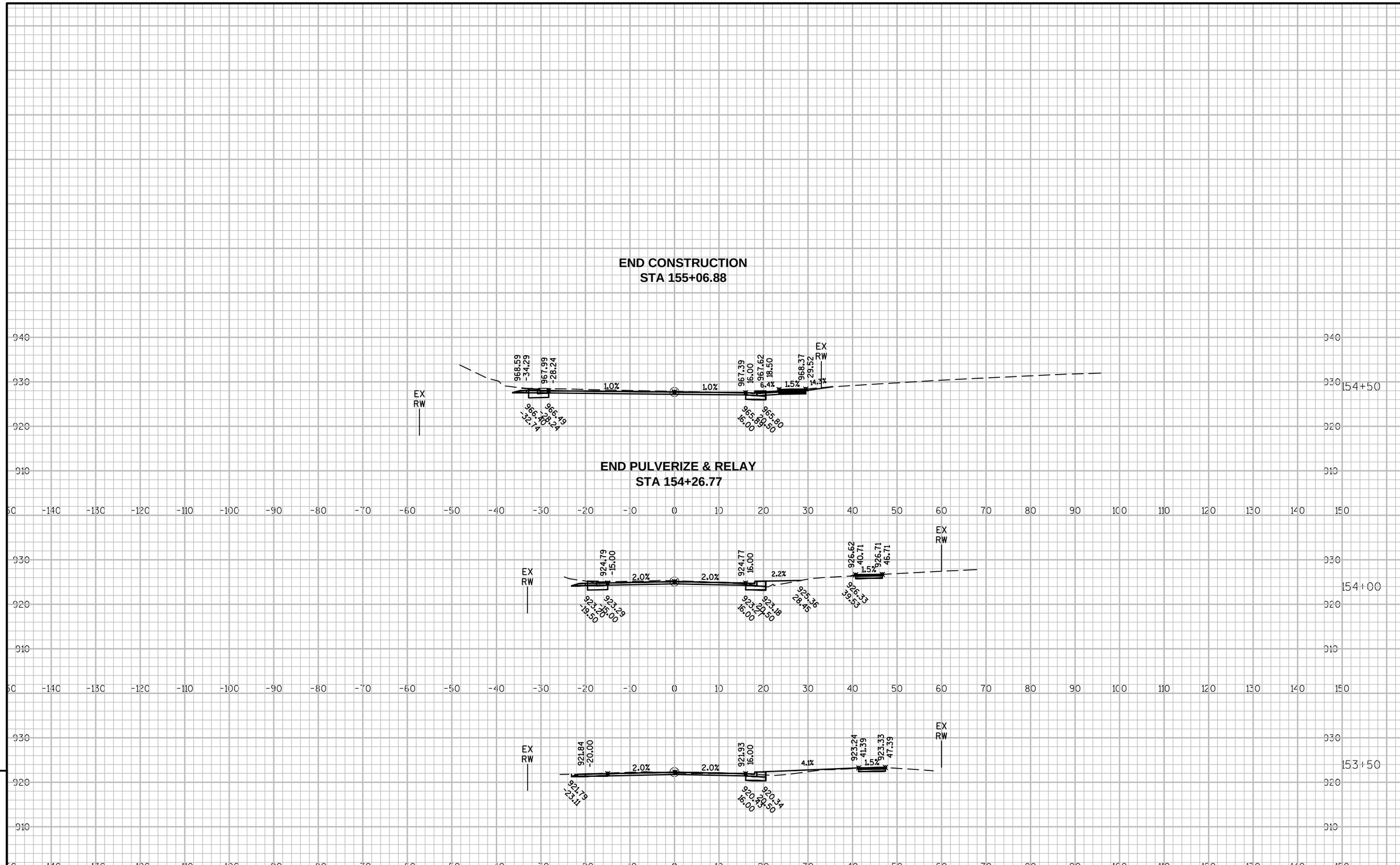

PROJECT NO: 14-3775(11)	HWY: C.T.H. "C"	COUNTY: WAUKESHA	CROSS SECTIONS: GENESEE STREET	SHEET 154	E

FILE NAME : S:\CAD PROJECTS\409-14 CTH C\SHT\14-3775(11) SHEET CROSS SECTION.DWG PLOT DATE : 12/2/2015 10:46 AM PLOT BY : HMERSON PLOT NAME :

WISDOT/CADDS SHEET 49